STD/MODULAR BRIDGE

Site # 005-01-9c13b 309 Tucker Rd over Little Horse Creek in Ashe County

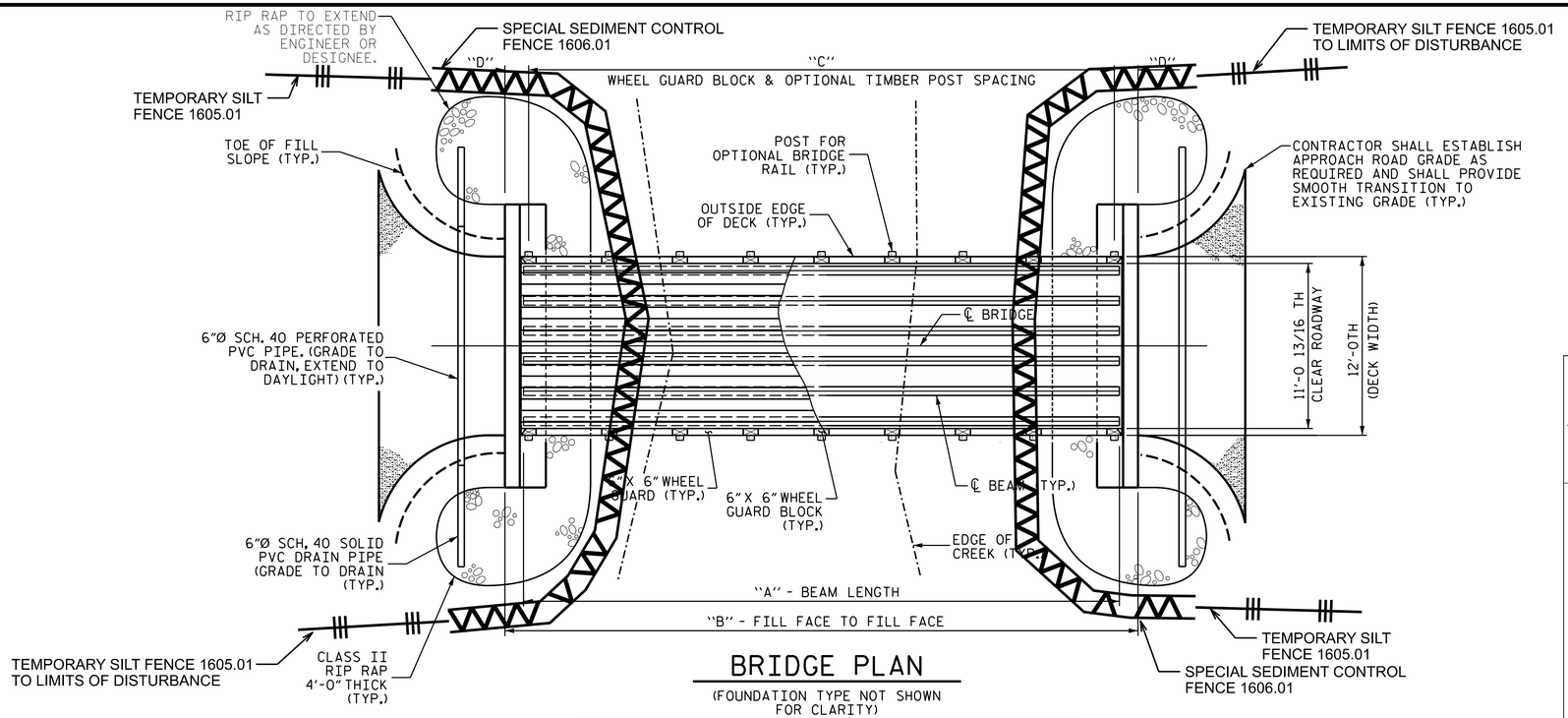

BRIDGE PLAN

(FOUNDATION TYPE NOT SHOWN FOR CLARITY)

DIMENSIONS TABLE

SPAN	A	B	C	D	E
20'-0"	20'-0"	22'-6"	5 SPA. @ 3'-8"	2'-1"	19'-9"
30'-0"	30'-0"	32'-6"	7 SPA. @ 4'-0"	2'-3"	29'-9"
40'-0"	40'-0"	42'-6"	9 SPA. @ 4'-3"	2'-1½"	39'-9"
50'-0"	50'-0"	52'-6"	11 SPA. @ 4'-4"	2'-5"	49'-9"

ONSITE CONCRETE WASHOUT STRUCTURE WITH LINER

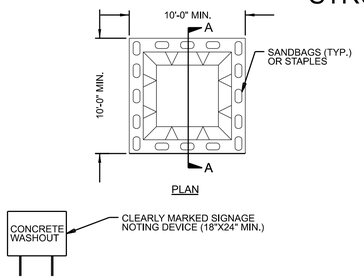

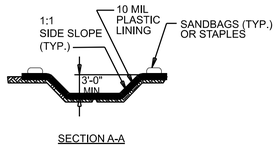

NOTES:
1. ACTUAL LOCATION DETERMINED IN FIELD

2. THE CONCRETE WASHOUT STRUCTURES SHALL BE MAINTAINED WHEN THE LIQUID AND/OR SOLID REACHES 75% OF THE STRUCTURES CAPACITY TO PROVIDE ADEQUATE HOLDING CAPACITY WITH A MINIMUM 12 INCHES OF FREEBOARD.

3.CONCRETE WASHOUT STRUCTURE NEEDS TO BE CLEARLY MARKED WITH SIGNAGE NOTING DEVICE.

BELOW GRADE WASHOUT STRUCTURE
NOT TO SCALE

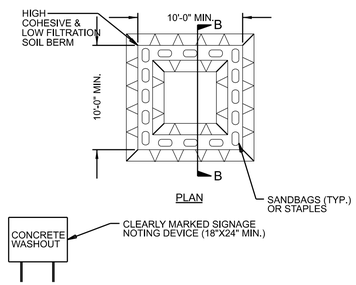

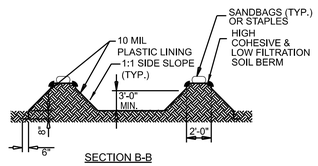

NOTES:
1. ACTUAL LOCATION DETERMINED IN FIELD

2. THE CONCRETE WASHOUT STRUCTURES SHALL BE MAINTAINED WHEN THE LIQUID AND/OR SOLID REACH 75% OF THE STRUCTURES CAPACITY TO PROVIDE ADEQUATE HOLDING CAPACITY WITH A MINIMUM 12 INCHES OF FREEBOARD.

3.CONCRETE WASHOUT STRUCTURE NEEDS TO BE CLEARLY MARKED WITH SIGNAGE NOTING DEVICE.

ABOVE GRADE WASHOUT STRUCTURE
NOT TO SCALE

ESC LEGEND

Special Sediment Control Fence

Temporary Silt Fence

NOTES

FOR OPTIONAL TIMBER BRIDGE RAIL DETAILS, SEE "OPTIONAL TIMBER BRIDGE RAIL" SHEET.

CONTRACTOR SHALL LOCATE THE EXPANSION BEARING ON THE "UPHILL" END OF THE BRIDGE. THERE WILL BE ONLY ONE EXPANSION BEARING PER BRIDGE.

CONTRACTOR SHALL PROVIDE EROSION CONTROL MEASURES, AS REQUIRED ACCORDING TO NCDOT STANDARD SPECIFICATIONS AND THE CONTRACT DOCUMENTS.

THE CONTRACTOR SHALL SET THE LOW-CHORD ELEVATION OF THE BRIDGE BASED ON EXISTING SITE CONDITIONS AND IN COORDINATION WITH THE ENGINEER, SUCH THAT THE NEW CROSSING PROVIDES CONVEYANCE GREATER THAN OR EQUAL TO THE ORIGINAL DESTROYED CROSSING. THE CONTRACTOR SHALL REFER TO THE BSR WHEN SETTING THE LOW-CHORD ELEVATION OF THE BRIDGE. NO CONSTRUCTION ACTIVITIES SHALL COMMENCE UNTIL ALL PARTIES HAVE AGREED UPON THE LOW-CHORD ELEVATION AND THE DATED PERMIT APPLICATION IS APPROVED.

TIMBER DECKING SHALL BE 2X8 BOARDS. 4X6 TIMBER DECKING (6" DIMENSION HORIZONTAL) MAY BE USED IN LIEU OF 2X8 DECKING; SEE OPTIONAL TYPICAL SECTION ON SHEET S-03 FOR DETAILS.

STATE OF NORTH CAROLINA DEPT. OF TRANSPORTATION DIVISION OF HIGHWAYS RALEIGH, N.C. 7-06

ENGLISH STANDARD DRAWING FOR **TEMPORARY SILT FENCE**

SHEET 1 OF 1 **1605.01**

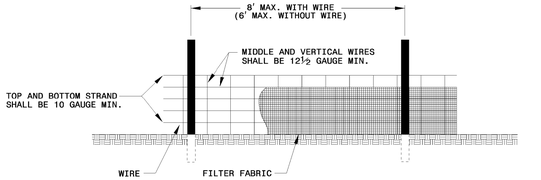

NOTES
USE WIRE A MINIMUM OF 32" IN WIDTH AND WITH A MINIMUM OF 6 LINE WIRES WITH 12" STAY SPACING.
USE FILTER FABRIC A MINIMUM OF 36" IN WIDTH AND FASTEN ADEQUATELY TO THE WIRE AS DIRECTED BY THE ENGINEER.
PROVIDE 5'-0" STEEL POST OF THE SELF-FASTENER ANGLE STEEL TYPE. ANGLE STEEL TYPE.

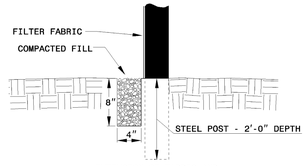

STATE OF NORTH CAROLINA DEPT. OF TRANSPORTATION DIVISION OF HIGHWAYS RALEIGH, N.C. 7-06

ENGLISH STANDARD DRAWING FOR **SPECIAL SEDIMENT CONTROL FENCE**

SHEET 1 OF 1 **1606.01**

GENERAL NOTES:

USE NO. 5 OR NO. 57 STONE FOR SEDIMENT CONTROL.

USE HARDWARE CLOTH 24 GAUGE WIRE MESH WITH ¼ INCH MESH OPENINGS.

INSTALL 5 FT. SELF FASTENER ANGLE STEEL POST 2 FT. DEEP MINIMUM.

SPACE POST A MAXIMUM OF 3 FT.

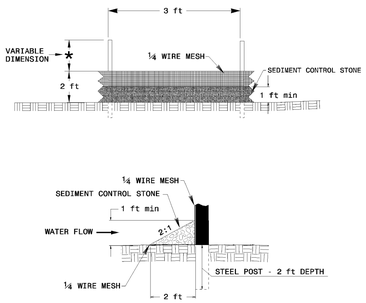

STATE OF NORTH CAROLINA DEPT. OF TRANSPORTATION DIVISION OF HIGHWAYS RALEIGH, N.C. 7-06

ENGLISH STANDARD DRAWING FOR **SPECIAL SEDIMENT CONTROL FENCE**

SHEET 1 OF 1 **1606.01**

Signed by: Matthew D Foster
7B1932BFAFC8472...
4/2/2026 | 6:30:17 PM EDT

NORTH CAROLINA PROFESSIONAL SEAL 20646 ENGINEER MATTHEW D. FOSTER

DOCUMENT NOT CONSIDERED FINAL UNLESS ALL SIGNATURES COMPLETED

NORTH CAROLINA OFFICE OF
EMERGENCY MANAGEMENT

PRIVATE DRIVEWAY BRIDGE STANDARDS

SINGLE LANE STEEL BEAM BRIDGE
TIMBER DECK

EROSION CONTROL

JMT Johnson, Mirmiran, & Thompson Inc.
108 Asheville Commerce Parkway
Candler, NC, 28715
License No: C-3097

DWN. BY: BC DATE: 04/2026
CHKD. BY: GFW DATE: 04/2026
DES. EGR. OF RECORD: GFW DATE: 04/2026

REVISIONS					
NO.	BY:	DATE:	NO.	BY:	DATE:
1			3		
2			4		

SHEET NO. EC-01
TOTAL SHEETS 13

$$$$USERNAME$$$$
DGN: $$DGN$$
TIME: $$$$SYSTIME$$$$

Docusign Envelope ID: 3EF8C3D1-9B39-818D-8061-3461676 7B20F

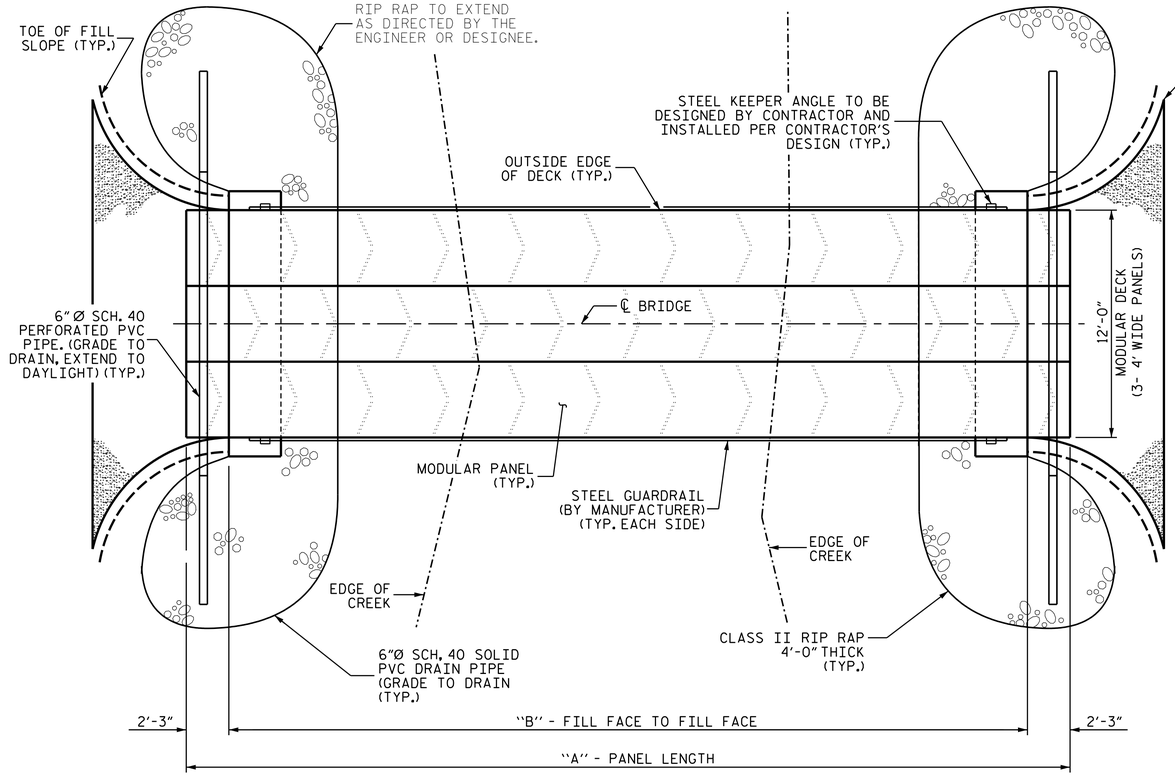

BRIDGE PLAN

(FOUNDATION TYPE NOT SHOWN FOR CLARITY)

DIMENSIONS TABLE		
A	B	C
30'-0"	25'-6"	22'-9"
40'-0"	35'-6"	32'-9"
50'-0"	45'-6"	42'-9"
60'-0"	55'-6"	52'-9"

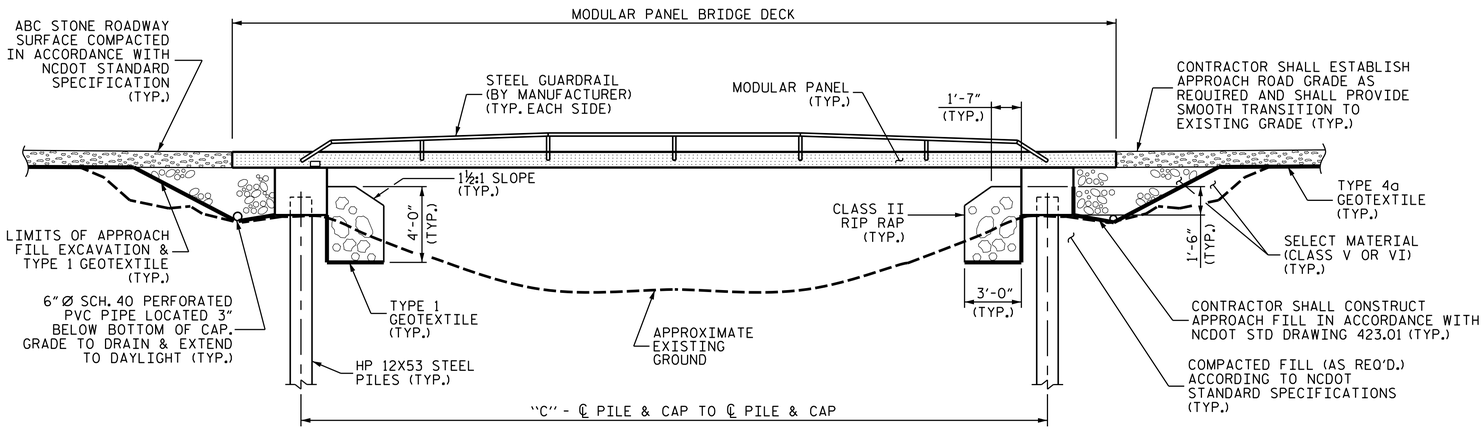

BRIDGE ELEVATION

(SHOWING DRIVEN 12X53 STEEL PILES FOUNDATION)

THE MODULAR BRIDGE SHALL BE POSITIONED TO PROVIDE A UNIFORM OVERHANG BEYOND THE FILL FACE OF EACH END BENT. THE OVERHANG SHALL BE SUPPORTED FULL LENGTH. THE CONTRACTOR SHALL PROVIDE A COMPACTED AGGREGATE BEARING SURFACE TO SUPPORT THE SUPERSTRUCTURE OVERHANG.

NOTES

CONTRACTOR SHALL LOCATE THE EXPANSION END OF THE SUPERSTRUCTURE ON THE "UPHILL" END OF THE BRIDGE. ONLY ONE EXPANSION END SHALL BE PERMITTED PER BRIDGE, WITH THE OPPOSITE END FUNCTIONING AS THE FIXED (RESTRAINED) END.

CONTRACTOR SHALL PROVIDE EROSION CONTROL MEASURES, AS REQUIRED ACCORDING TO NCDOT STANDARD SPECIFICATIONS AND THE CONTRACT DOCUMENTS.

THE CONTRACTOR SHALL SET THE LOW-CHORD ELEVATION OF THE BRIDGE BASED ON EXISTING SITE CONDITIONS AND IN COORDINATION WITH THE ENGINEER, SUCH THAT THE NEW CROSSING PROVIDES CONVEYANCE GREATER THAN OR EQUAL TO THE ORIGINAL DESTROYED CROSSING. THE CONTRACTOR SHALL REFER TO THE BSR WHEN SETTING THE LOW-CHORD ELEVATION OF THE BRIDGE. NO CONSTRUCTION ACTIVITIES SHALL COMMENCE UNTIL ALL PARTIES HAVE AGREED UPON THE LOW-CHORD ELEVATION AND THE DATED PERMIT APPLICATION IS APPROVED.

MODULAR BRIDGE SUPERSTRUCTURE AND STEEL GUARDRAIL SHOWN ARE FOR ILLUSTRATIVE PURPOSES ONLY. FINAL DESIGN, LAYOUT, GEOMETRY, AND DETAILS SHALL BE DESIGNED BY THE CONTRATOR AS PART OF THE MODULAR BRIDGE SYSTEM. THE CONTRACTOR SHALL PROVIDE SEALED MODULAR BRIDGE PLANS PREPARED BY A LICENSED NORTH CAROLINA PROFESSIONAL ENGINEER.

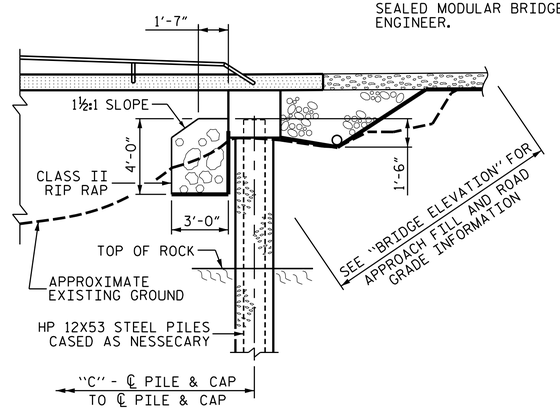

BRIDGE PARTIAL ELEVATION

(SHOWING DRILLED-IN 12X53 STEEL PILES FOUNDATION)

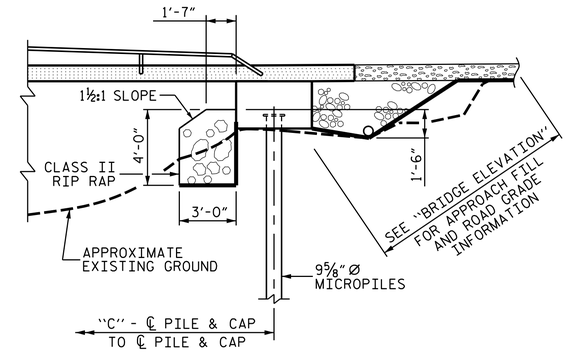

BRIDGE PARTIAL ELEVATION

(SHOWING MICROPILES FOUNDATION)

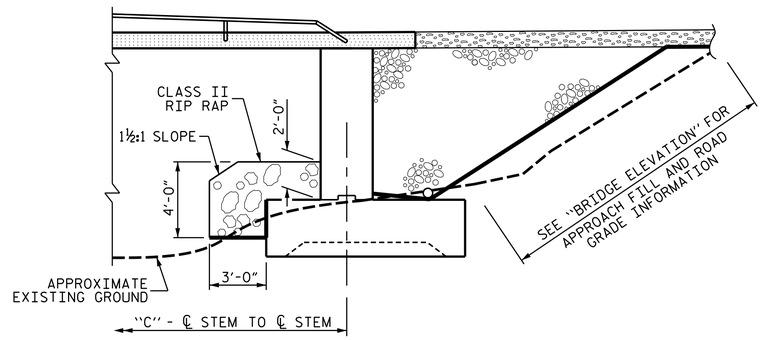

BRIDGE PARTIAL ELEVATION

(SHOWING SPREAD FOOTING FOUNDATION)

NORTH CAROLINA PROFESSIONAL SEAL 045282 ENGINEER GWENDOLEN F. WILSON
07/27/2026

DOCUMENT NOT CONSIDERED FINAL UNLESS ALL SIGNATURES COMPLETED

NORTH CAROLINA OFFICE OF
EMERGENCY MANAGEMENT

PRIVATE DRIVEWAY BRIDGE STANDARDS

MODULAR PANEL BRIDGE

GENERAL DRAWING

Johnson, Mirmiran, & Thompson Inc.
108 Asheville Commerce Parkway
Candler, NC, 28715
License No: C-3097

DWN. BY: BC/WDC DATE: 05/2026
CHKD. BY: GFW DATE: 05/2026
DES. EGR. OF RECORD: GFW DATE: 05/2026

REVISIONS						SHEET NO.
NO.	BY:	DATE:	NO.	BY:	DATE:	S-01
1			3			TOTAL SHEETS
2			4			7

w:\cr\cter
DGN: #ws:/jmt-pw.bentley.com:jmt~pw~01/Documents/Projects/2025/25-00529/25-00529-001/Design/Structures/NC PRB-Panel Bridges Standards/001-ME Bridge_General Drawing_Sign
TIME: 7:25:2025

Docusign Envelope ID: 3EF8C3D1-9B39-818D-8061-34616767B20F

NOTE:

THE MODULAR BRIDGE SUPERSTRUCTURE, INCLUDING GUARDRAIL, AND STEEL KEEPER ANGLES, SHALL BE DESIGNED, PROVIDED, AND INSTALLED BY THE CONTRACTOR. THE SYSTEM SHALL BE CONFIGURED WITH ONE FIXED END AND ONE EXPANSION END. SEALED DESIGN PLANS SHALL BE SUBMITTED FOR REVIEW PRIOR TO FABRICATION.

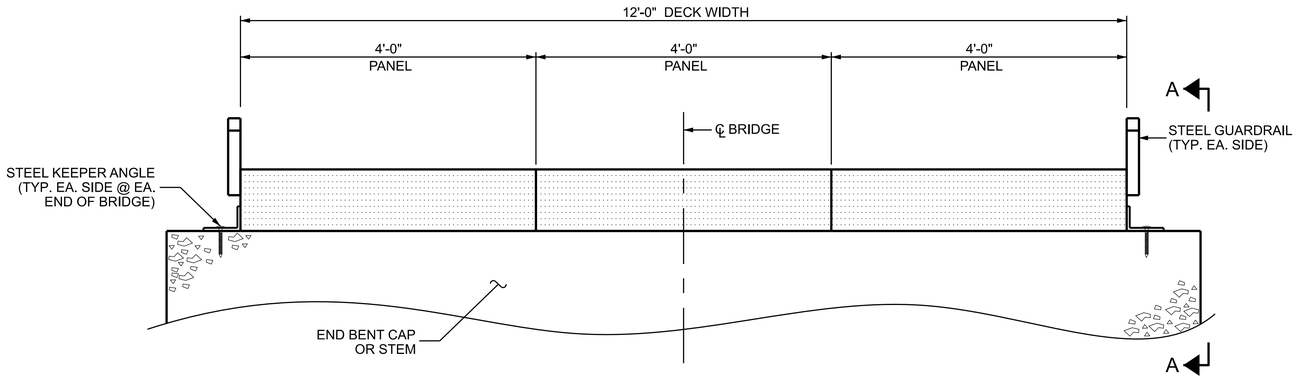

TYPICAL SECTION

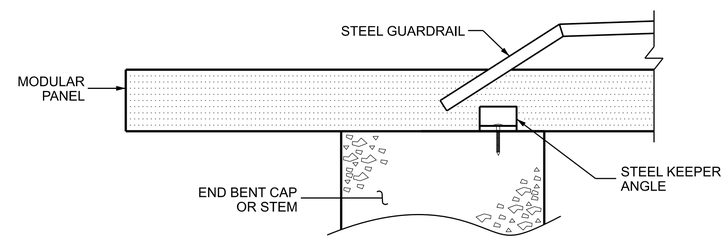

VIEW A-A

THE MODULAR BRIDGE SHALL BE POSITIONED TO PROVIDE A UNIFORM OVERHANG BEYOND THE FILL FACE OF EACH END BENT. THE OVERHANG SHALL BE SUPPORTED FULL LENGTH. THE CONTRACTOR SHALL PROVIDE A COMPACTED AGGREGATE BEARING SURFACE TO SUPPORT THE SUPERSTRUCTURE OVERHANG.

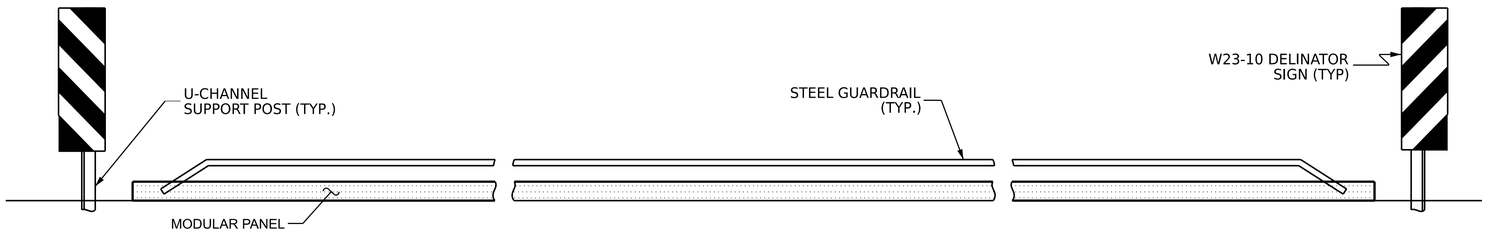

STEEL GUARDRAIL ELEVATION



07/27/2026

DOCUMENT NOT CONSIDERED FINAL UNLESS ALL SIGNATURES COMPLETED

NORTH CAROLINA OFFICE OF
EMERGENCY MANAGEMENT

PRIVATE DRIVEWAY BRIDGE STANDARDS

MODULAR PANEL BRIDGE

TYPICAL SECTION & NOTES

Johnson, Mirmiran, & Thompson Inc.
108 Asheville Commerce Parkway
Candler, NC, 28715
License No: C-3097

DWN. BY: BC/WDC DATE: 05/2026
CHKD. BY: GFW DATE: 05/2026
DES. EGR. OF RECORD: GFW DATE: 05/2026

REVISIONS					
NO.	BY:	DATE:	NO.	BY:	DATE:
1			3		
2			4		

SHEET NO. S-02
TOTAL SHEETS 7

wdcrutcher
DGN: #ws://jmt-pw.bentley.com/jmt-pw-01/Documents/Projects/2025/25-00529/25-00529-001/Design/Structures/NC PRB-Panel Bridges Standards/002-ME Bridge_Typical Section_S2.dgn
TIME: 7/25/2025

Docusign Envelope ID: 3EF8C3D1-9B39-818D-8061-34616767B20F

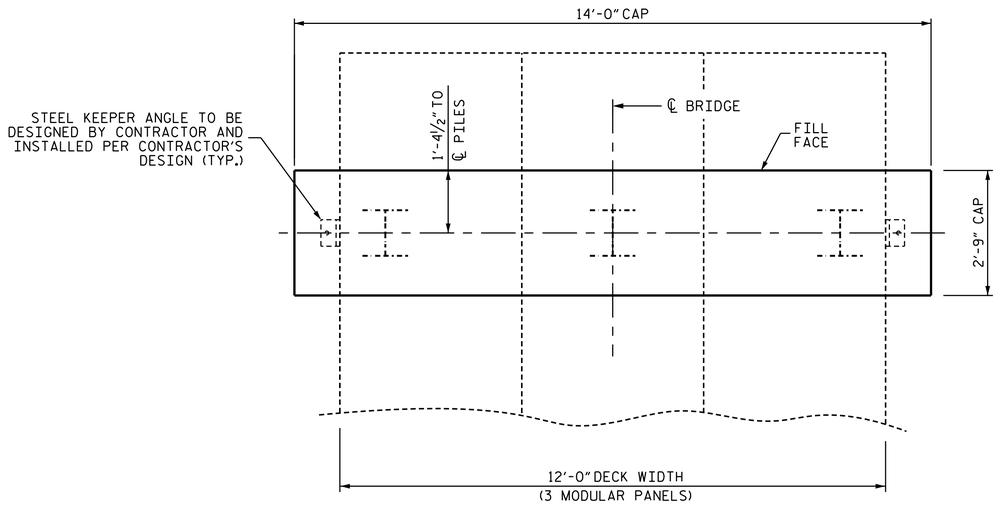

PLAN

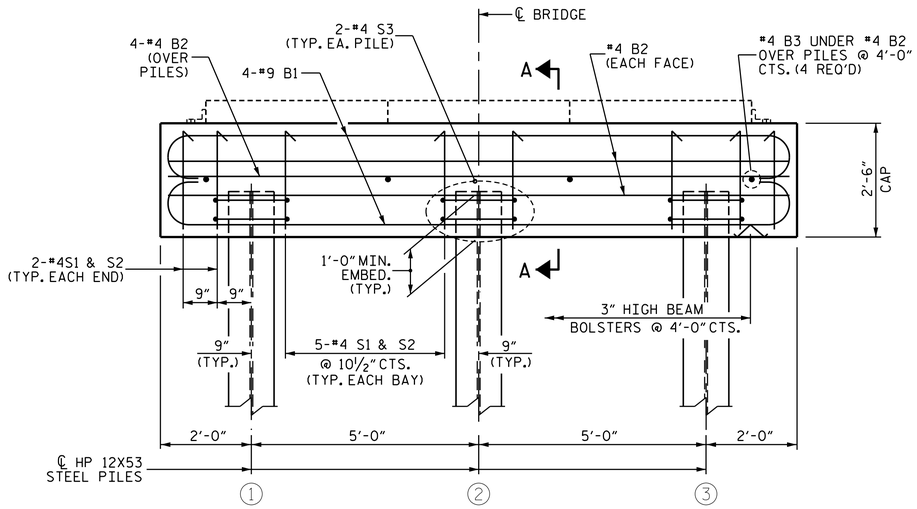

ELEVATION

BAR TYPES

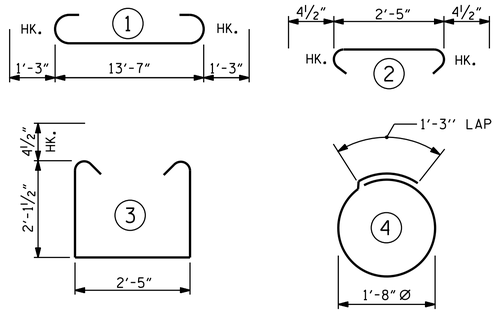

ALL BAR DIMENSIONS ARE OUT TO OUT.

BILL OF MATERIAL
FOR ONE END BENT

BAR	NO.	SIZE	TYPE	LENGTH	WEIGHT
B1	8	#9	1	16'-1"	437
B2	8	#4	STR	13'-8"	73
B3	4	#4	STR	2'-5"	7
S1	14	#4	3	7'-5"	69
S2	14	#4	2	3'-2"	30
S3	6	#4	4	6'-6"	26

REINFORCING STEEL (FOR ONE END BENT)	642 LBS.
CLASS A CONCRETE (FOR ONE END BENT)	3.6 C.Y.

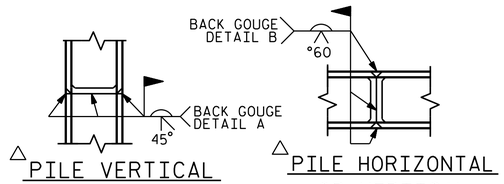

△PILE VERTICAL

△PILE HORIZONTAL OR VERTICAL

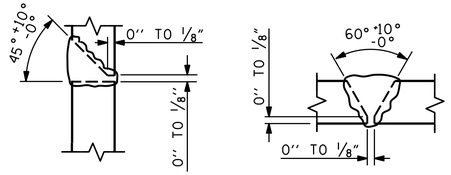

DETAIL A

DETAIL B

PILE SPLICE DETAILS

△POSITION OF PILE DURING WELDING.

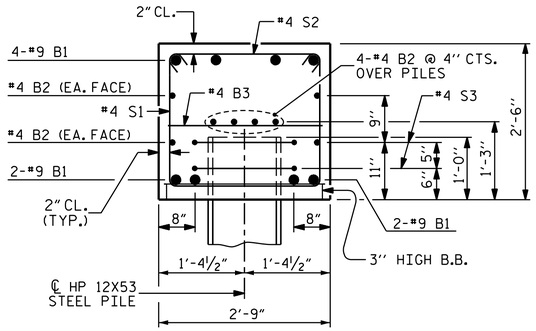

SECTION A-A

GENERAL NOTES

CONTRACTOR SHALL SLOPE TOP OF CAP TO MATCH LONGITUDINAL GRADE OF THE BRIDGE. SLOPES SHALL MATCH ON BOTH END BENT 1 AND END BENT 2 CAPS.

MODULAR BRIDGE SUPERSTRUCTURE SHOWN IS SCHEMATIC ONLY. ACTUAL MODULAR BRIDGE SYSTEM CONFIGURATION AND MEMBER SIZING SHALL BE DETERMINED BY THE CONTRACTOR TO MEET THE SPECIFIED DESIGN LOADS.

FOUNDATION NOTES
DRIVEN PILES

INSTALL PILES IN ACCORDANCE WITH SECTION 450 OF THE STANDARD SPECIFICATIONS.

DO NOT INSTALL PILES UNTIL FILL HAS BEEN PLACED.

DRIVE PILES TO A MINIMUM PENETRATION OF AT LEAST 10'-0" INTO NATURAL GROUND OR CHANNEL BOTTOM.

DRIVE ALL PILES TO REFUSAL BELOW MINIMUM PENETRATION.

PREDRILLING OR SPUDDING MAY BE REQUIRED TO ACHIEVE THE MINIMUM PILE PENETRATION.

SUBMIT THE PROPOSED PILE DRIVING METHODS AND EQUIPMENT FOR ACCEPTANCE BY THE ENGINEER.



07/27/2026

DOCUMENT NOT CONSIDERED FINAL UNLESS ALL SIGNATURES COMPLETED

Johnson, Mirmiran, & Thompson Inc.
108 Asheville Commerce Parkway
Candler, NC, 28715
License No: C-3097

DWN. BY: BC/WDC DATE: 05/2026
CHKD. BY: GFW DATE: 05/2026
DES. EGR. OF RECORD: GFW DATE: 05/2026

REVISIONS						SHEET NO.
NO.	BY:	DATE:	NO.	BY:	DATE:	S-03
1			3			TOTAL SHEETS
2			4			7

NORTH CAROLINA OFFICE OF
EMERGENCY MANAGEMENT

PRIVATE DRIVEWAY BRIDGE STANDARDS

MODULAR PANEL BRIDGE

END BENT
DRIVEN PILES

wdcrafter
DGN: pw://jmt-pw.bentley.com/jmt-pw-01/Documents/Projects/2025/25-00529/25-00529-001/Design/Structures/NC PRB-Panel Bridges Standards/003-ME Bridge_End Bent_Driven Piles_S3.dgn
TIME: 7:25:1 2026

Docusign Envelope ID: 3EF8C3D1-9B39-818D-8061-34616767B20F

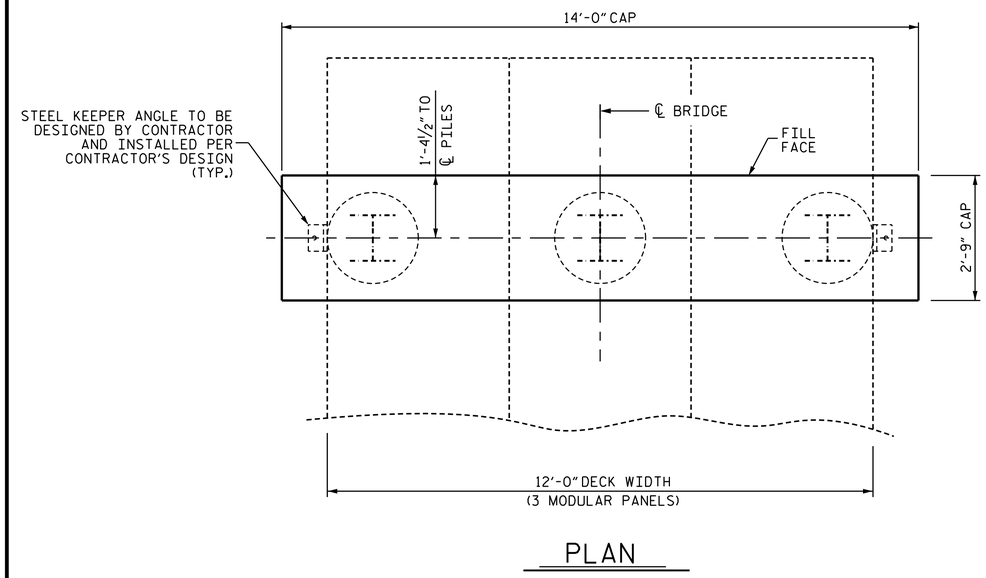

PLAN

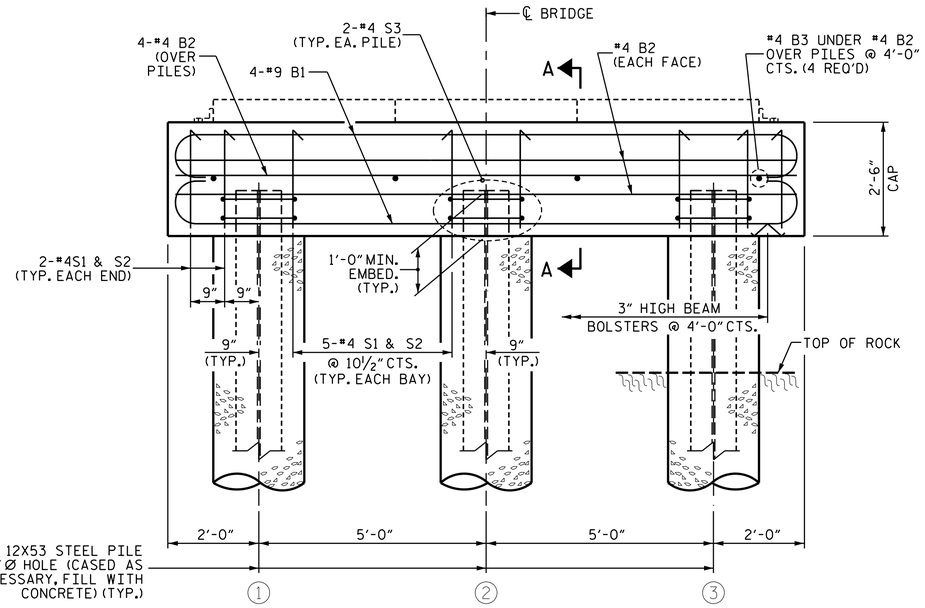

ELEVATION

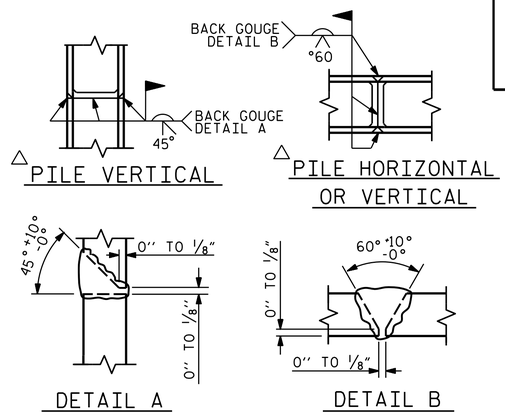

PILE SPLICE DETAILS

△ POSITION OF PILE DURING WELDING.

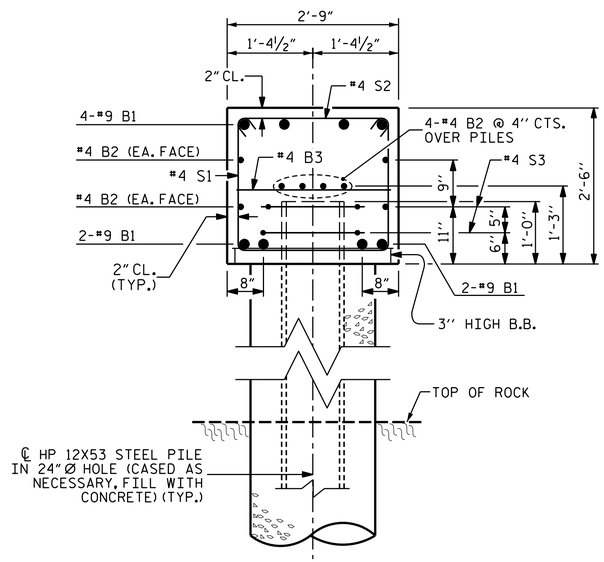

SECTION A-A

BAR TYPES

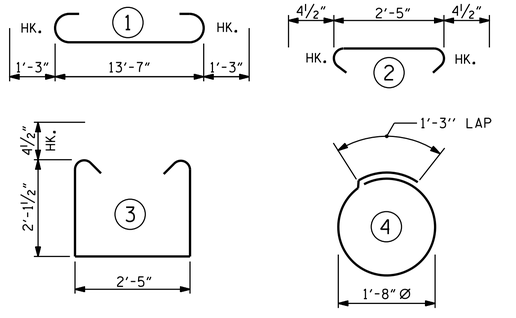

ALL BAR DIMENSIONS ARE OUT TO OUT.

BILL OF MATERIAL
FOR ONE END BENT

BAR	NO.	SIZE	TYPE	LENGTH	WEIGHT
B1	8	#9	1	16'-1"	437
B2	8	#4	STR	13'-8"	73
B3	4	#4	STR	2'-5"	7
S1	14	#4	3	7'-5"	69
S2	14	#4	2	3'-2"	30
S3	6	#4	4	6'-6"	26

REINFORCING STEEL (FOR ONE END BENT)	642 LBS.
CLASS A CONCRETE (FOR ONE END BENT)	3.6 C.Y.

GENERAL NOTES

CONTRACTOR SHALL SLOPE TOP OF CAP TO MATCH LONGITUDINAL GRADE OF THE BRIDGE. SLOPES SHALL MATCH ON BOTH END BENT 1 AND END BENT 2 CAPS.

MODULAR BRIDGE SUPERSTRUCTURE SHOWN IS SCHEMATIC ONLY. ACTUAL MODULAR BRIDGE SYSTEM CONFIGURATION AND MEMBER SIZING SHALL BE DETERMINED BY THE CONTRACTOR TO MEET THE SPECIFIED DESIGN LOADS.

FOUNDATION NOTES
DRILLED-IN PILES

ROCK QUALITY DESIGNATION (RQD)
GEOLOGICAL STRENGTH INDEX (GSI)

INSTALL DRILLED-IN PILES IN ACCORDANCE WITH SECTION 450 OF THE STANDARD SPECIFICATIONS.

MINIMUM PILE PENETRATION OF 10-FT INTO NATURAL GROUND OR CHANNEL BOTTOM IS REQUIRED.

MINIMUM ROCK SOCKET DEPTHS, UNLESS OTHERWISE INDICATED ON PROJECT SPECIFIC DATA SHEET:

- 4'-0" MINIMUM (RQD >70, GSI >50)
- 6'-0" MINIMUM (RQD 30-70, GSI 30-50)
- 8'-0" MINIMUM (RQD <30, GSI <30)

REFER TO BORING LOGS FOR RQD AND GSI DATA.

PILES SHALL BE SEATED IN THE BOTTOM OF THE EXCAVATION. PILE DRIVING IS NOT REQUIRED.

BACKFILL WITH CONCRETE ONLY. DO NOT PROCEED WITH CONSTRUCTION ACTIVITIES UNTIL THE 28 DAY STRENGTH IS ACHIEVED.

NORTH CAROLINA PROFESSIONAL SEAL 045282 ENGINEER WENDOLEN F. WILSON
07/27/2026

DOCUMENT NOT CONSIDERED FINAL UNLESS ALL SIGNATURES COMPLETED

NORTH CAROLINA OFFICE OF
EMERGENCY MANAGEMENT

PRIVATE DRIVEWAY BRIDGE STANDARDS

MODULAR PANEL BRIDGE

END BENT
DRILLED IN PILES

Johnson, Mirmiran, & Thompson Inc.
108 Asheville Commerce Parkway
Candler, NC, 28715
License No: C-3097

DWN. BY: BC/WDC DATE: 05/2026
CHKD. BY: GFW DATE: 05/2026
DES. EGR. OF RECORD: GFW DATE: 05/2026

REVISIONS						SHEET NO.
NO.	BY:	DATE:	NO.	BY:	DATE:	S-04
1			3			TOTAL SHEETS
2			4			7

wdcrutcher
DGN: pw://jmt-pw.bentley.com/jmt-pw-01/Documents/Projects/2025/25-00529/25-00529-001/Design/Structures/NC PRB-Panel Bridges Standards/004-ME Bridge_End Bent_Drilled Piles_S4.dgn
TIME: 7/25/2026

Docusign Envelope ID: 3EF8C3D1-9B39-818D-8061-34616767B20F

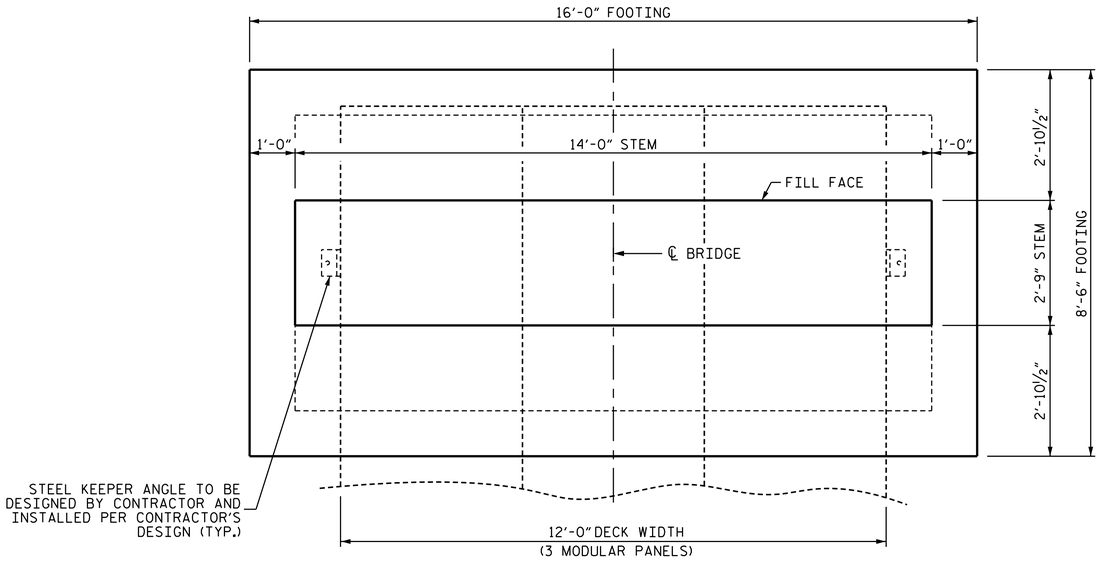

PLAN

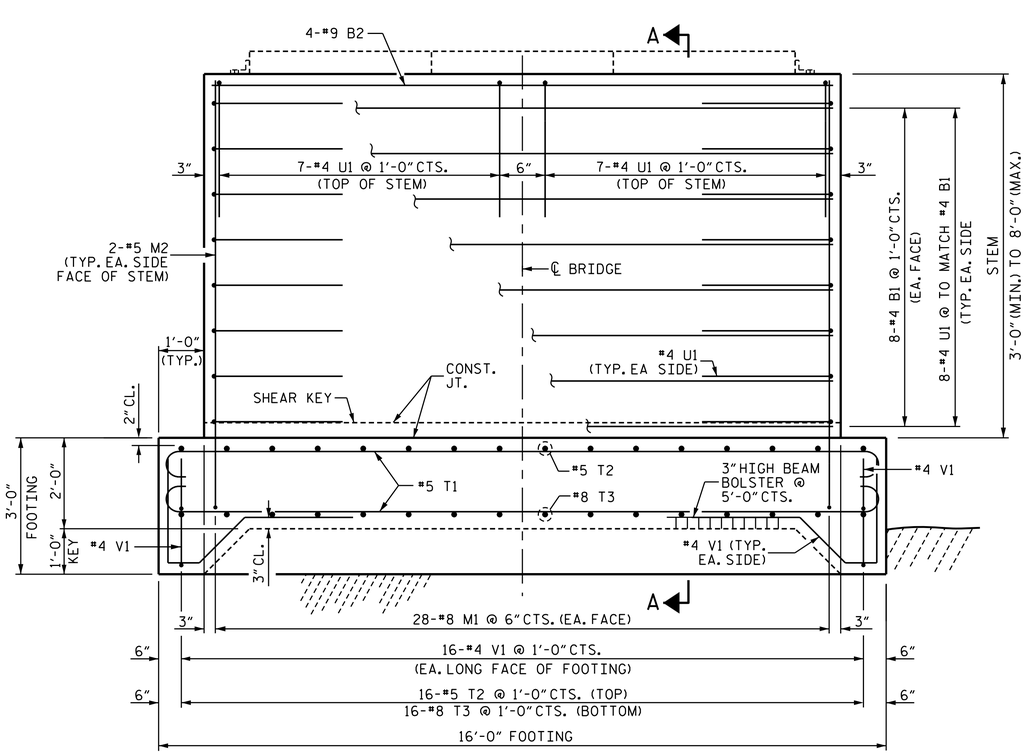

ELEVATION

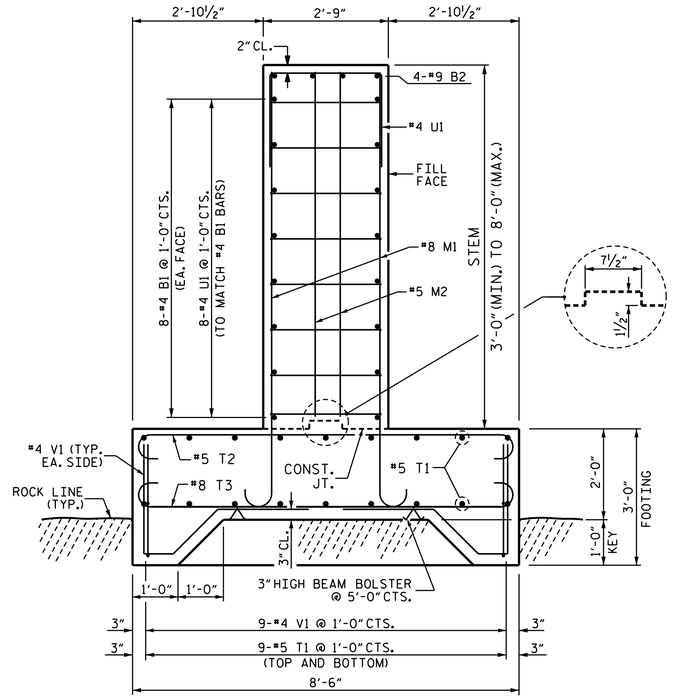

SECTION A-A

GENERAL NOTES

CONTRACTOR SHALL SLOPE TOP OF CAP TO MATCH LONGITUDINAL GRADE OF THE BRIDGE. SLOPES SHALL MATCH ON BOTH END BENT 1 AND END BENT 2 CAPS.

THE FINAL STEM WALL HEIGHT SHALL BE DETERMINED IN THE FIELD BASED ON EXISTING ROCK ELEVATIONS. THE STEM WALL HEIGHT SHALL NOT BE LESS THAN 3'-0" OR GREATER THAN 8'-0.

STEM WALL REINFORCEMENT AND DETAILS ARE BASED ON A MAXIMUM STEM WALL HEIGHT OF 8'-0". THE CONTRACTOR SHALL ADJUST THE HORIZONTAL REINFORCEMENT LAYOUT TO ACCOMMODATE FIELD-VERIFIED STEM WALL HEIGHTS WHILE MAINTAINING REBAR SIZES, SPACING, LAP LENGTHS, AND THE OVERALL REINFORCING CONFIGURATION SHOWN IN THE STRUCTURAL PLANS AND DETAILS.

MODULAR BRIDGE SUPERSTRUCTURE SHOWN IS SCHEMATIC ONLY. ACTUAL MODULAR BRIDGE SYSTEM CONFIGURATION AND MEMBER SIZING SHALL BE DETERMINED BY THE CONTRACTOR TO MEET THE SPECIFIED DESIGN LOADS.

FOUNDATION NOTES

SPREAD FOOTING

FOUNDATION EXCAVATIONS SHALL BE ACCOMPLISHED IN ACCORDANCE WITH SECTION 410 OF THE STANDARD SPECIFICATIONS.

A GEOTECHNICAL ENGINEER LICENSED IN THE STATE OF NORTH CAROLINA SHALL OBSERVE THE BEARING SURFACE AND CONFIRM THE FOOTING IS CONSTRUCTED ON ROCK. THE ENGINEER SHALL PROVIDE A LETTER VERIFYING ACCEPTANCE OF THE BEARING SURFACE.

CLEAN ALL ROCK OF LOOSE MATERIAL AND CUT TO A FIRM SURFACE, AS DIRECTED BY THE ENGINEER AND FILL WITH CONCRETE, MORTAR OR GROUT. LEAVE ROCK SURFACE IN A ROUGH CONDITION.

BEARING SURFACE MUST RESIST A MAXIMUM APPLIED BEARING PRESSURE OF 3.0 TSF.

KEY IN FOOTINGS AT LEAST 1 FT INTO ROCK.

**BILL OF MATERIAL
FOR ONE END BENT

BAR	NO.	SIZE	TYPE	LENGTH	WEIGHT
B1	16	#4	STR	13'-8"	146
B2	4	#9	STR	13'-8"	186
M1	56	#8	3	10'-5"	1,558
M2	4	#5	STR	7'-6"	31
T1	18	#5	1	16'-8"	313
T2	16	#5	1	9'-2"	153
T3	16	#8	1	9'-10"	420
U1	30	#4	2	8'-1"	162
V1	50	#4	4	6'-7"	220
REINFORCING STEEL					3,189 LBS.

CLASS A CONCRETE BREAKDOWN		
POUR #1	FOOTING	12.7 C.Y.
POUR #2	END BENT STEM	11.4 C.Y.
TOTAL		24.1 C.Y.

** THE CONTRACTOR'S ATTENTION IS CALLED TO THE FACT THAT THE QUANTITIES AND REINFORCING BARS SHOWN IN THE BILL OF MATERIAL ARE BASED ON AN 8'-0" MAXIMUM STEM WALL HEIGHT. THE CONTRACTOR IS RESPONSIBLE FOR THE FINAL QUANTITIES BASED ON THE ACTUAL STEM WALL HEIGHT.

BAR TYPES

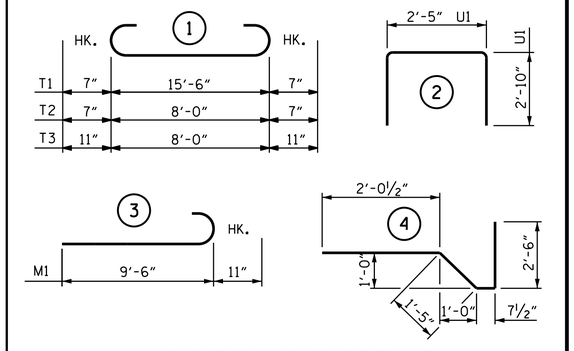

ALL BAR DIMENSIONS ARE OUT TO OUT.

NORTH CAROLINA PROFESSIONAL SEAL 045282 ENGINEER GWENDOLEN F. WILSON

07/27/2026

DOCUMENT NOT CONSIDERED FINAL UNLESS ALL SIGNATURES COMPLETED

NORTH CAROLINA OFFICE OF
EMERGENCY MANAGEMENT

PRIVATE DRIVEWAY BRIDGE STANDARDS

MODULAR PANEL BRIDGE

END BENT
SPREAD FOOTING

Johnson, Mirmiran, & Thompson Inc.
108 Asheville Commerce Parkway
Candler, NC, 28715
License No: C-3097

DWN. BY: BC/WDC DATE: 05/2026
CHKD. BY: GFW DATE: 05/2026
DES. EGR. OF RECORD: GFW DATE: 05/2026

REVISIONS						SHEET NO.
NO.	BY:	DATE:	NO.	BY:	DATE:	S-05
1			3			TOTAL SHEETS
2			4			7

wdrcutcher
DGN: ..\mt-pw.bentley.com_mt-pw-01_Documents_Projects_2025_25-00529_25-00529-001_Design_Structures_NC PRB-Panel Bridges Standards_005-ME Bridge_End Bent_Spread Footing_S5.dgn
TIME: 11:25:2025

Docusign Envelope ID: 3EF8C3D1-9B39-818D-8061-34616767B20F

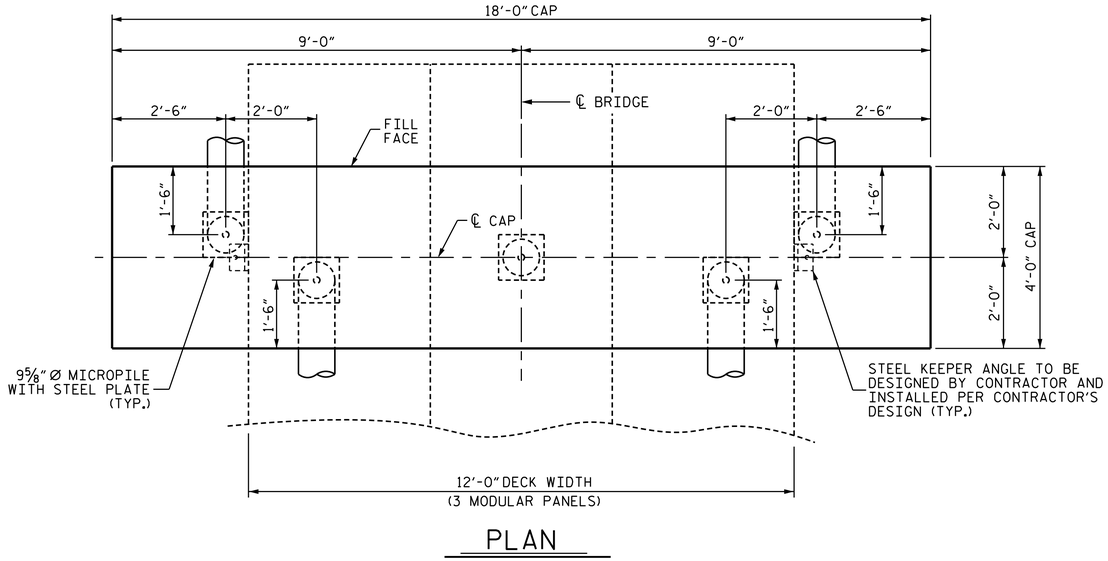

PLAN

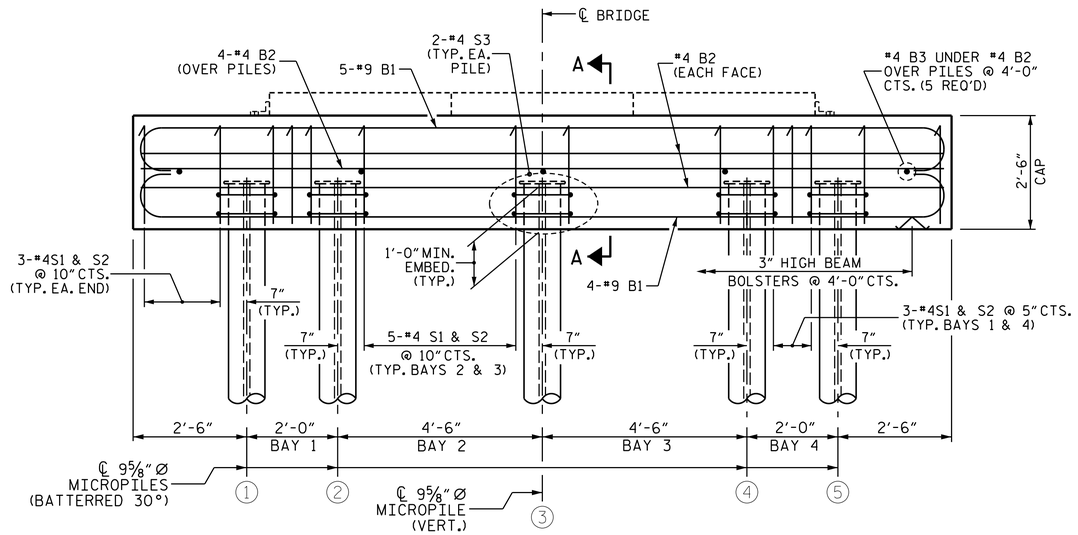

ELEVATION

BAR TYPES

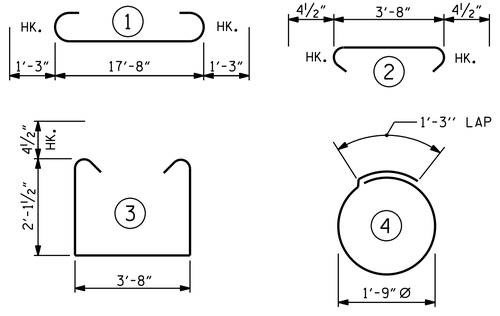

ALL BAR DIMENSIONS ARE OUT TO OUT.

BILL OF MATERIAL
FOR ONE END BENT

BAR	NO.	SIZE	TYPE	LENGTH	WEIGHT
B1	9	#9	1	20'-2"	617
B2	8	#4	STR	17'-8"	94
B3	5	#4	STR	3'-8"	12
S1	22	#4	3	8'-8"	127
S2	22	#4	2	4'-5"	65
S3	10	#4	4	6'-9"	45

REINFORCING STEEL (FOR ONE END BENT) 960 LBS.

CLASS A CONCRETE (FOR ONE END BENT) 6.7 C.Y.

GENERAL NOTES

CONTRACTOR SHALL SLOPE TOP OF CAP TO MATCH LONGITUDINAL GRADE OF THE BRIDGE. SLOPES SHALL MATCH ON BOTH END BENT 1 AND END BENT 2 CAPS.

MODULAR BRIDGE SUPERSTRUCTURE SHOWN IS SCHEMATIC ONLY. ACTUAL MODULAR BRIDGE SYSTEM CONFIGURATION AND MEMBER SIZING SHALL BE DETERMINED BY THE CONTRACTOR TO MEET THE SPECIFIED DESIGN LOADS.

REFER TO MICROPILE DRAWINGS FOR MICROPILE REQUIREMENTS, PROPERTIES AND OTHER DETAILS.

FOUNDATION NOTES
MICROPILES

FOR MICROPILES, SEE SPECIAL PROVISIONS.

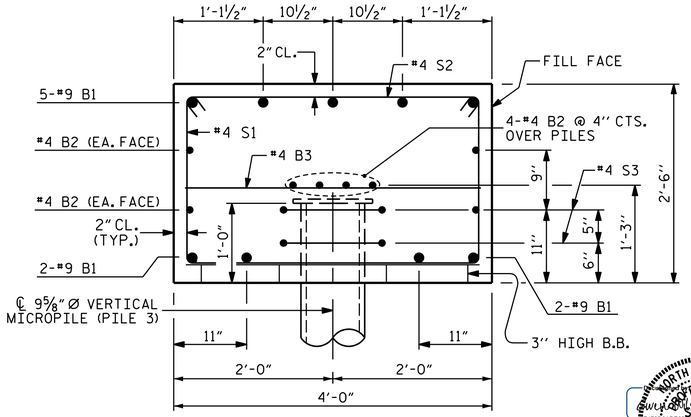

SECTION A-A

(PILES 1, 2, 4 & 5 ARE BATTERRED 30° AND NOT SHOWN FOR CLARITY)

NORTH CAROLINA PROFESSIONAL SEAL 045282 ENGINEER GWENDOLEN F. WILSON
07/27/2026

DOCUMENT NOT CONSIDERED FINAL UNLESS ALL SIGNATURES COMPLETED

Johnson, Mirmiran, & Thompson Inc.
108 Asheville Commerce Parkway
Candler, NC, 28715
License No: C-3097

NORTH CAROLINA OFFICE OF
EMERGENCY MANAGEMENT

PRIVATE DRIVEWAY BRIDGE STANDARDS

MODULAR PANEL BRIDGE

END BENT
MICROPILES

DWN. BY: BC/WDC	DATE: 06/2026
CHKD. BY: GFW	DATE: 06/2026
DES. EGR. OF RECORD: GFW	DATE: 06/2026

REVISIONS						SHEET NO.
NO.	BY:	DATE:	NO.	BY:	DATE:	S-06
1			3			TOTAL SHEETS
2			4			7

wdcrutcher
DGN: pw://mt-pw.bentley.com/mt-pw-01/Documents/Projects/2025/25-00529/25-00529-001/Design/Structures/NC PRB-Panel Bridges Standards/006-ME Bridge_End Bent_MicroPiles_S6.dgn
TIME: 7/25/2026

Docusign Envelope ID: 3EF8C3D1-9B39-818D-8061-34616767B20F

STRUCTURAL STEEL / HARDWARE NOTES:

THE MODULAR BRIDGE SUPERSTRUCTURE SHALL BE PROVIDED AND DESIGNED BY THE CONTRACTOR. THE CONTRACTOR SHALL PROVIDE SEALED MODULAR BRIDGE PLANS PREPARED BY A LICENSED PROFESSIONAL ENGINEER.

ALL STRUCTURAL STEEL SHALL BE AASHTO M270 GRADE 50 AND PAINTED IN ACCORDANCE WITH SYSTEM 1 OR GALVANIZED OF THE STRUCTURAL STEEL SHOP COATING PROGRAM AND ARTICLE 442-8 OF THE STANDARD SPECIFICATIONS UNLESS OTHERWISE NOTED ON THE PLANS.

COATING APPLICATION FOR MODULAR BRIDGE STRUCTURAL STEEL SHALL NOT BE PERFORMED UNTIL SHOP FABRICATION INCLUDING CUTTING, DRILLING AND WELDING HAS BEEN COMPLETED.

HARDWARE FOR THE MODULAR BRIDGE SUPERSTRUCTURE SHALL BE GALVANIZED IN ACCORDANCE WITH SECTION 1076 OF THE STANDARD SPECIFICATION, UNLESS OTHERWISE NOTED ON THE PLANS.

DAMAGED GALVANIZED SURFACES FOR THE MODULAR BRIDGE SUPERSTRUCTURE SHALL BE REPAIRED IN ACCORDANCE WITH THE STANDARD SPECIFICATIONS ARTICLE 1076-77.

DAMAGED PAINTED SURFACES FOR THE MODULAR BRIDGE SUPERSTRUCTURE SHALL BE REPAIRED IN ACCORDANCE WITH SECTION 442 OF THE STANDARD SPECIFICATIONS.

DESIGN LOADS:

LIVE LOAD:

TRUCK LOAD:

THIS BRIDGE WAS DESIGNED FOR:

HS20
GVWR = 72,000 LBS
NUMBER OF AXLES: 3
AXLE WEIGHTS:
- GAWR FRONT = 8,000 LBS
- GAWR INTERMEDIATE = 32,000 LBS
- GAWR REAR = 32,000 LBS

EV2
GVWR = 57,500 LBS
NUMBER OF AXLES: 2
AXLE WEIGHTS:
- GAWR FRONT = 24,000 LBS
- GAWR REAR = 33,500 LBS

EV3
GVWR = 86,000 LBS
NUMBER OF AXLES: 3
AXLE WEIGHTS:
- GAWR FRONT = 24,000 LBS
- GAWR INTERMEDIATE = 31,000 LBS
- GAWR REAR = 31,000 LBS

LIVE LOAD FACTORS:

HS-20 = 1.75
EV2 = 1.3
EV3 = 1.3

LIVE LOAD FACTORS LOAD RATING:

HS-20 = 1.35
EV2 = 1.0
EV3 = 1.0

MULTIPLE PRESENCE FACTOR:

MPF = 1.0

LANE LOAD:

NO LANE LOAD WAS APPLIED.

IMPACT:

DYNAMIC IMPACT FACTOR IS 33%.

DESIGN ASSUMPTIONS/PARAMETERS:

BRIDGE IS SINGLE SPAN.

BRIDGE WIDTH = 12'-11" OUT TO OUT.

REF.#	DESIGN VEHICLES SCHEMATIC	
HS-20	8K, 32K, 32K; 14', 14', 28'	72K 36 TON
EV2	24K, 33.5K; 15'	57.5K 28.75 TON
EV3	24K, 31K, 31K; 15', 4', 19'	86K 43 TONS

GENERAL NOTES:

THE SUBSTRUCTURE HAS BEEN DESIGNED IN ACCORDANCE WITH THE NORTH CAROLINA DEPARTMENT OF TRANSPORTATION (NCDOT) "STRUCTURES MANAGEMENT UNIT MANUAL", DATED 6/15/23, AND THE AASHTO "LRFD BRIDGE DESIGN SPECIFICATIONS", 9th EDITION.

THE MODULAR BRIDGE SUPERSTRUCTURE SHALL BE DESIGNED BY THE CONTRACTOR IN ACCORDANCE WITH THE CONTRACT DOCUMENTS, INCLUDING THE GEOMETRY AND REQUIREMENTS SHOWN IN THE PLANS. DESIGN OF SUPERSTRUCTURE IS NOT INCLUDED IN THESE PLANS.

THESE DRAWINGS ARE INTENDED ONLY FOR FOR THE DESIGN AND CONSTRUCTION OF THE BRIDGE SUBSTRUTURE AND FOR THE INSTALLATION OF CONTRACTOR-SUPPLIED SINGLE-SPAN MODULAR BRIDGE SUPERSTRUCTURE FOR PRIVATE DRIVEWAYS IN COUNTIES AS LISTED IN THE CONTRACT DOCUMENTS BY NORTH CAROLINA OFFICE OF EMERGENCY MANAGEMENT IN RESPONSE TO THE DAMGE CAUSED BY HURRICANE HELENE.

BRIDGE CONSTRUCTION, WORKMANSHIP, AND MATERIALS FOR THE SUBSTRUCTURE SHALL BE IN ACCORDANCE WITH THE NCDOT "STANDARD SPECIFICATIONS FOR ROADS AND STRUCTURES", 2024 EDITION.

WORK ASSOCIATED WITH THE MODULAR BRIDGE SUPERSTRUCTURE SHALL BE IN ACCORDANCE WITH THE CONTRACTOR'S DESIGN AND APPLICABLE SPECIFICATIONS.

THIS BRIDGE IS LOCATED IN SEISMIC ZONE 1.

IT IS ASSUMED THAT THERE ARE NO UTILITY CONFLICTS. THE CONTRACTOR SHALL INVESTIGATE THE PRESENCE OF UTILITIES BEFORE COMMENCING WORK.

FOR SUBMITTAL OF WORKING DRAWINGS, SEE SPECIAL PROVISIONS.

FOR FALSEWORK AND FORMWORK, SEE SPECIAL PROVISIONS.

FOR CRANE SAFETY, SEE SPECIAL PROVISIONS.

FOR GROUT FOR STRUCTURES, SEE SPECIAL PROVISIONS.

FOR ASBESTOS ASSESSMENT, SEE SPECIAL PROVISIONS.

ALL DIMENSIONS SHOWN ARE HORIZONTAL OR VERTICAL, UNLESS OTHERWISE NOTED.

CONTRACTOR SHALL SET BRIDGE ELEVATIONS SUCH THAT WATER WILL DRAIN AND NOT POND ON THE BRIDGE DECK AND MINIMUM LONGITUDINAL GRADE SHALL BE 0.5% AND MAXIMUM GRADE SHALL BE 6%.
FOR PILE-SUPPORTED END BENTS, PLACE APPROACH EMBANKMENT (CORE MATERIAL) PRIOR TO PILE INSTALLATION.

THIS BRIDGE HAS BEEN DESIGNED FOR ADTT < 100.

EROSION AND SEDIMENT CONTROL MEASURES SHOWN ON SHEET EC-01 ARE FOR GENERAL GUIDANCE ONLY AND REPRESENT MINIMUM REQUIREMENTS. THE CONTRACTOR SHALL PROVIDE, INSTALL, AND MAINTAIN ALL REQUIRED EROSION AND SEDIMENT CONTROL MEASURES IN ACCORDANCE WITH THE STANDARD SPECIFICATIONS, CONTRACT DOCUMENTS, AND APPLICABLE REGULATIONS. THE CONTRACTOR SHALL BE RESPONSIBLE FOR MODIFYING THESE MEASURES AND PROVIDING ANY ADDITIONAL DEVICES NECESSARY TO ACCOUNT FOR ACTUAL SITE CONDITIONS, INCLUDING GROUNDWATER CONDITIONS AND WEATHER EVENTS, AND TO PREVENT SEDIMENT FROM LEAVING THE PROJECT SITE.

ALL REFERENCES WITHIN THESE PLANS TO "STANDARD SPECIFICATIONS" OR "NCDOT SPECIFICATIONS" SHALL BE GOVERNED BY THE NCDOT "STANDARD SPECIFICATIONS FOR ROADS AND STRUCTURES" DATED JANUARY 2024.

TRAFFIC CONTROL SHALL BE PROVIDED IN ACCORDANCE WITH THE CONTRACT DOCUMENTS, INCLUDING THE SPECIAL PROVISIONS, AND IN CONFORMANCE WITH THE NCDOT STANDARD SPECIFICATIONS, NCDOT ROADWAY STANDARD DRAWINGS, AND THE MANUAL ON UNIFORM TRAFFIC CONTROL DEVICES (MUTCD). THE CONTRACTOR SHALL BE RESPONSIBLE FOR PROVIDING, INSTALLING, AND MAINTAINING ALL TRAFFIC CONTROL DEVICES NECESSARY TO SAFELY CONDUCT THE WORK AND PROTECT THE TRAVELING PUBLIC.

THE CONTRACTOR SHALL BE RESPONSIBLE FOR THE DESIGN OF THE MODULAR BRIDGE SUPERSTRUCTURE, INCLUDING ALL CONNECTIONS, BEARING DETAILS, AND INTERFACES WITH THE SUBSTRUCTURE. SEALED MODULAR BRIDGE PLANS PREPARED BY A LICENSED NORTH CAROLINA PROFESSIONAL ENGINEER SHALL BE SUBMITTED BY THE CONTRACTOR.

REVIEW OF SHOP DRAWINGS IS FOR GENERAL CONFORMANCE WITH THE PLANS AND DOES NOT RELIEVE THE CONTRACTOR OF RESPONSIBILITY FOR DESIGN, FABRICATION, OR CONSTRUCTION.

MATERIAL PROPERTIES:

CONCRETE: MINIMUM COMPRESSIVE STRENGTH, f'c = 3,000 psi (CLASS A).

STRUCTURAL STEEL: AASHTO M270, GRADE 50.

WELDS: SMAW, 70 KSI ELECTRODES PER NCDOT STANDARD SPECIFICATIONS.

NORTH CAROLINA PROFESSIONAL SEAL 045282 ENGINEER GWENDOLEN F. WILSON
GWENDOLEN F. WILSON
07/27/2026

DOCUMENT NOT CONSIDERED FINAL UNLESS ALL SIGNATURES COMPLETED

NORTH CAROLINA OFFICE OF
EMERGENCY MANAGEMENT

PRIVATE DRIVEWAY BRIDGE STANDARDS

MODULAR PANEL BRIDGE

GENERAL NOTES

Johnson, Mirmiran, & Thompson Inc.
108 Asheville Commerce Parkway
Candler, NC, 28715
License No: C-3097

DWN. BY: BC/WDC DATE: 05/2026
CHKD. BY: GFW DATE: 05/2026
DES. EGR. OF RECORD: GFW DATE: 05/2026

REVISIONS						SHEET NO.
NO.	BY:	DATE:	NO.	BY:	DATE:	S-07
1			3			TOTAL SHEETS
2			4			7

wdcrutcher
DGN: ..\..\..\jmt-pw.bentley.com\jmt-cw-01\Documents\Projects\2025\25-00529\25-00529-001\Design\Structures\NC PRB-Panel Bridges Standards\007-ME Bridge_General Notes_S7.dgn
TIME: 7/25/2026

Docusign Envelope ID: 7DCAD729-896F-8434-8064-B80FB7A31D66

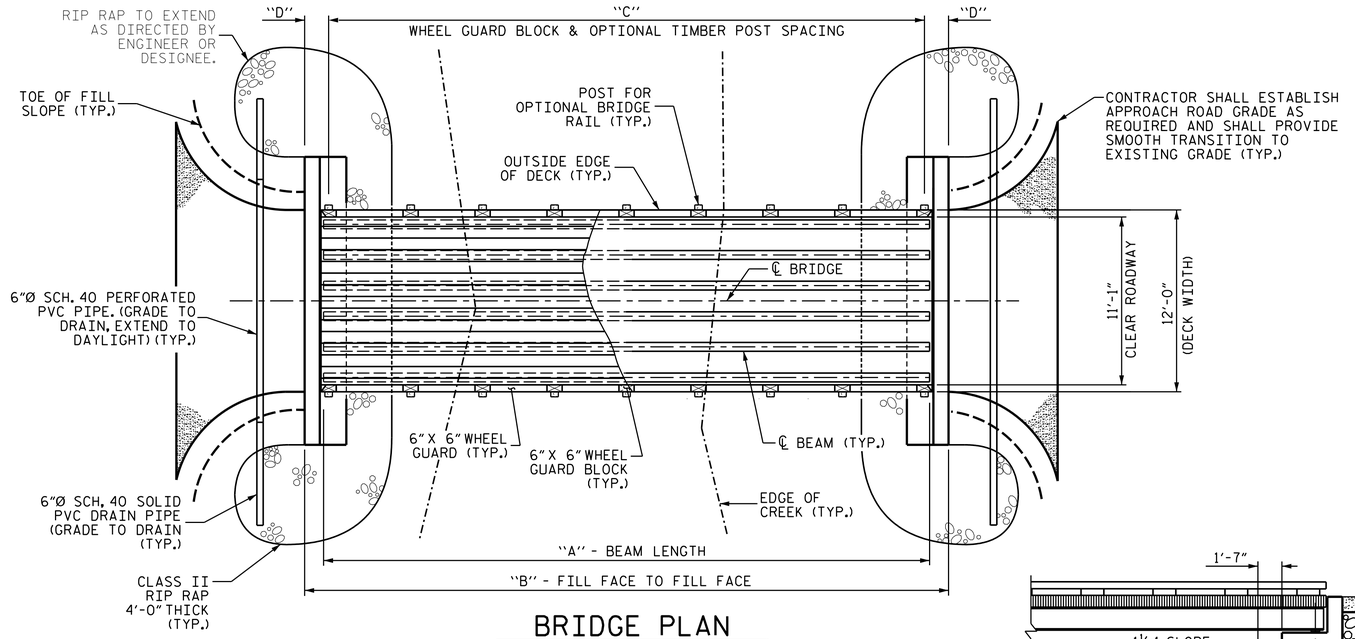

BRIDGE PLAN

(FOUNDATION TYPE NOT SHOWN FOR CLARITY)

DIMENSIONS TABLE					
SPAN	A	B	C	D	E
20'-0"	20'-0"	22'-6"	5 SPA. @ 3'-8"	2'-1"	19'-9"
30'-0"	30'-0"	32'-6"	7 SPA. @ 4'-0"	2'-3"	29'-9"
40'-0"	40'-0"	42'-6"	9 SPA. @ 4'-3"	2'-1½"	39'-9"
50'-0"	50'-0"	52'-6"	11 SPA. @ 4'-4"	2'-5"	49'-9"
60'-0"	60'-0"	62'-6"	13 SPA. @ 4'-5½"	2'-3¼"	59'-9"
70'-0"	70'-0"	72'-6"	15 SPA. @ 4'-6"	2'-6"	69'-9"

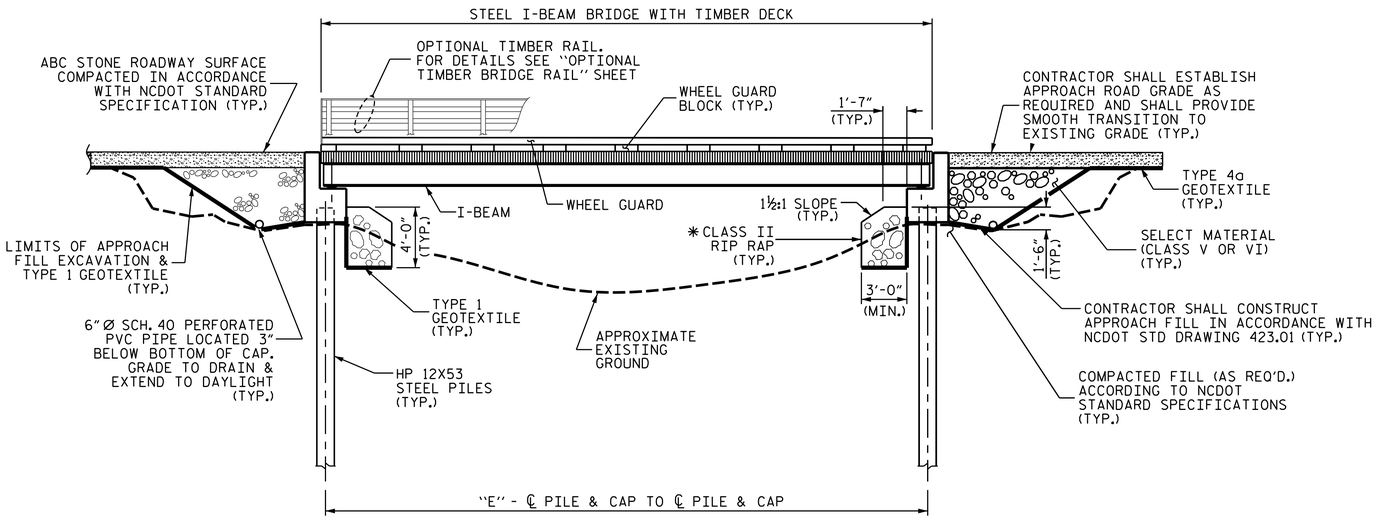

BRIDGE ELEVATION

(SHOWING DRIVEN 12X53 STEEL PILES FOUNDATION)

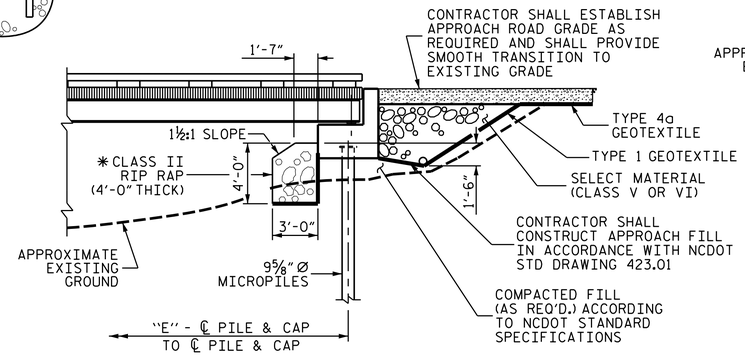

BRIDGE PARTIAL ELEVATION

(SHOWING MICROPILES FOUNDATION)

NOTES

FOR OPTIONAL TIMBER BRIDGE RAIL DETAILS, SEE "OPTIONAL TIMBER BRIDGE RAIL" SHEET.

CONTRACTOR SHALL LOCATE THE EXPANSION BEARING ON THE "UPHILL" END OF THE BRIDGE. THERE WILL BE ONLY ONE EXPANSION BEARING PER BRIDGE.

CONTRACTOR SHALL PROVIDE EROSION CONTROL MEASURES, AS REQUIRED ACCORDING TO NCDOT STANDARD SPECIFICATIONS AND THE CONTRACT DOCUMENTS.

THE CONTRACTOR SHALL SET THE LOW-CHORD ELEVATION OF THE BRIDGE BASED ON EXISTING SITE CONDITIONS AND IN COORDINATION WITH THE ENGINEER, SUCH THAT THE NEW CROSSING PROVIDES CONVEYANCE GREATER THAN OR EQUAL TO THE ORIGINAL DESTROYED CROSSING. THE CONTRACTOR SHALL REFER TO THE BSR WHEN SETTING THE LOW-CHORD ELEVATION OF THE BRIDGE. NO CONSTRUCTION ACTIVITIES SHALL COMMENCE UNTIL ALL PARTIES HAVE AGREED UPON THE LOW-CHORD ELEVATION AND THE DATED PERMIT APPLICATION IS APPROVED.

TIMBER DECKING SHALL BE 2X8 BOARDS. 4X6 TIMBER DECKING (6" DIMENSION HORIZONTAL) MAY BE USED IN LIEU OF 2X8 DECKING; SEE OPTIONAL TYPICAL SECTION ON SHEET S-03 FOR DETAILS.

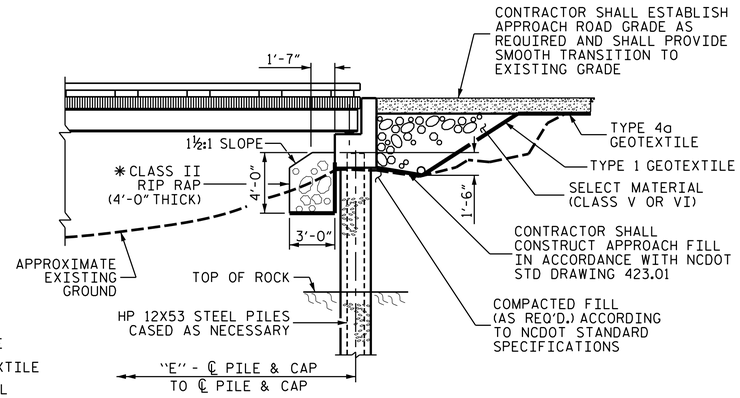

BRIDGE PARTIAL ELEVATION

(SHOWING DRILLED-IN 12X53 STEEL PILES FOUNDATION)

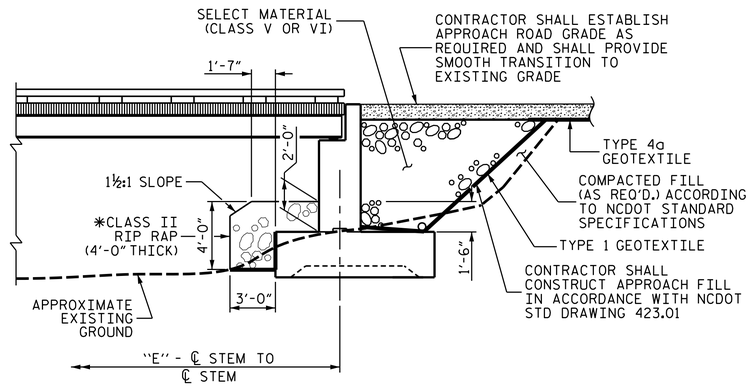

BRIDGE PARTIAL ELEVATION

(SHOWING SPREAD FOOTING FOUNDATION)

*SEE BSR FOR RIP RAP LIMITS

NORTH CAROLINA PROFESSIONAL SEAL 045282 ENGINEER GWENDOLEN F. WILSON
Docusigned by: Gwendolen Wilson
07/27/2026

DOCUMENT NOT CONSIDERED FINAL UNLESS ALL SIGNATURES COMPLETED

NORTH CAROLINA OFFICE OF
EMERGENCY MANAGEMENT

PRIVATE DRIVEWAY BRIDGE STANDARDS

SINGLE LANE STEEL BEAM BRIDGE
TIMBER DECK

GENERAL DRAWING

Johnson, Mirmiran, & Thompson Inc.
108 Asheville Commerce Parkway
Candler, NC, 28715
License No: C-3097

DWN. BY: BC DATE: 04/2026
CHKD. BY: GFW DATE: 04/2026
DES. EGR. OF RECORD: GFW DATE: 04/2026

REVISIONS					
NO.	BY:	DATE:	NO.	BY:	DATE:
1			3		
2			4		

SHEET NO. S-01
TOTAL SHEETS 14

wdcruter
DGN: pw://jmt-pw.bentley.com/jmt-pw-01/Documents/Projects/2025/25-00529/25-00529-000/Design/Structures/NC PRB-Steel Beam with Timber Deck Standards/Single Lane Steel Beam with Timber Deck Plans/2 Standard Drawings/20-70 FT - 12 FT DECK WIDTH/001-SI_General Drawing.dgn
TIME: 7:23:20 2026

Docusign Envelope ID: 7DCAD729-896F-8434-8064-B80FB7A31D66

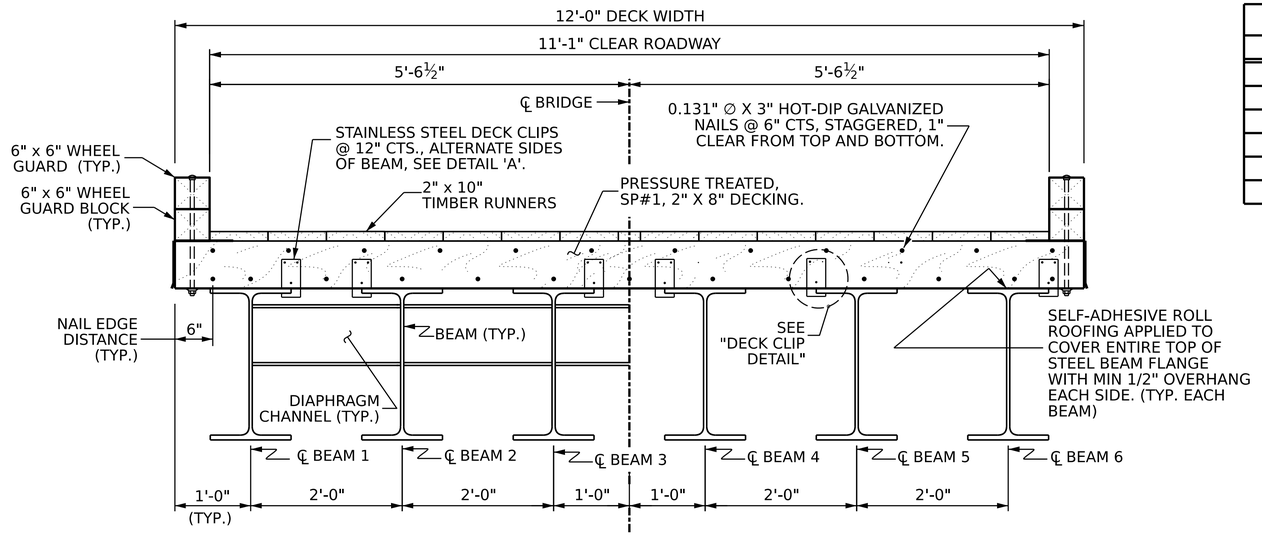

TYPICAL SECTION

MATERIALS TABLE				
SPAN	BEAM	DIAPHRAGM CHANNEL	DECK PLANK	DECKING SQ. FT.
20'-0"	W16X36	C12X20.7	2X8	244
30'-0"	W21X48	C12X20.7	2X8	364
40'-0"	W24X76	C12X20.7	2X8	484
50'-0"	W24X104	C12X20.7	2X8	604
60'-0"	W30X116	C12X20.7	2X8	724
70'-0"	W33X130	C12X20.7	2X8	844

NOTES

FOR TIMBER BRIDGE DECK SYSTEM DETAILS, SEE "PLAN OF SPAN" SHEET.

FOR OPTIONAL TIMBER RAILS, SEE ''OPTIONAL TIMBER BRIDGE RAIL'' SHEET.

FOR BEAM AND DIAPHRAGM DETAILS, SEE "FRAMING PLAN & BEAM DETAILS" SHEET.

TREAT ALL DRILLED OR NEWLY EXPOSED HOLES IN TIMBER MEMBERS BY PUMPING WITH BITUMINOUS ASPHALT-BASED ROOFING CEMENT, OR APPROVED PRESERVATIVE SYSTEM BEFORE INSTALLING HARDWARE.

SEE ''PLAN OF SPAN'' SHEET FOR NUMBER OF WHEEL GUARDS AND WHEEL GUARD SPACING.

STAINLESS STEEL DECK CLIPS SHALL BE FABRICATED FROM 12-GAUGE STEEL.

THE 2"X10" TIMBER RUNNERS SHALL BE LAID OUT SYMMETRICALLY ABOUT THE CENTERLINE OF THE BRIDGE. ANY REQUIRED WIDTH ADJUSTMENT SHALL BE MADE AT THE CENTER RUNNER.

PLACE 2X10 WEARING SURFACE BOARDS PARALLEL TO TRAFFIC WITH A UNIFORM ¼" CLEAR LONGITUDINAL GAP BETWEEN ADJACENT BOARDS. DO NOT BUTT BOARDS TIGHT. THIS GAP SHALL BE MAINTAINED TO FACILITATE SURFACE DRAINAGE AND PREVENT MOISTURE ENTRAPMENT AT THE INTERFACE OF THE STRUCTURAL DECK.

INSTALL 2X10 WEARING SURFACE BOARDS WITH GROWTH RINGS CURVING DOWNWARD TO PROMOTE DRAINAGE.

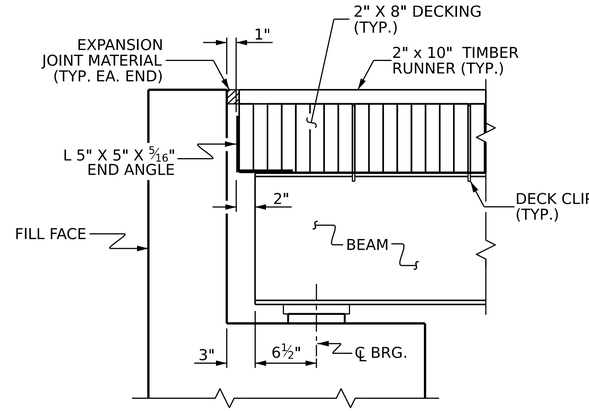

SECTION AT END BENT

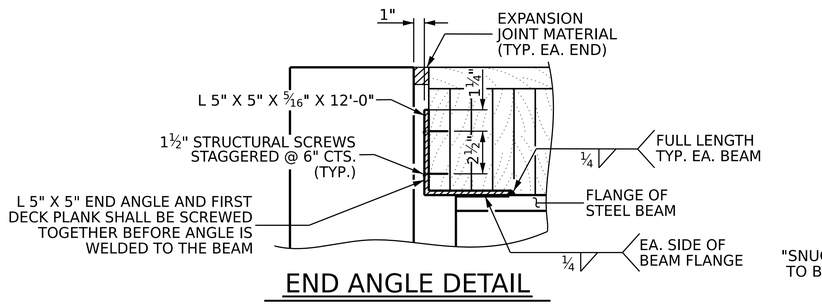

END ANGLE DETAIL

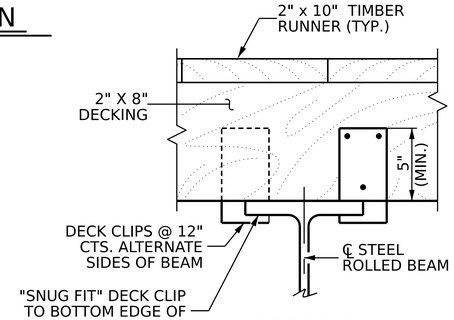

DETAIL 'A'

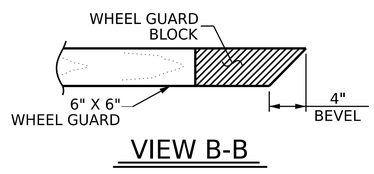

VIEW B-B

DECK CLIP DIMENSIONS		
SPAN	BEAM	*A
20'-0"	W16X36	½"
30'-0"	W21X48	½"
40'-0"	W24X76	¾"
50'-0"	W24X104	13/16"
60'-0"	W30X116	15/16"
70'-0"	W33X130	15/16"

* DIMENSION A IS FOR INFORMATION ONLY. IT IS BASED ON THE FLANGE THICKNESS PLUS A 1/16" TOLERANCE. THE CONTRACTOR SHALL VERIFY THIS DIMENSION WITH DECK CLIP SUPPLIER. THE DECK CLIP SHALL HAVE A SNUG FIT TO THE BEAM FLANGE.

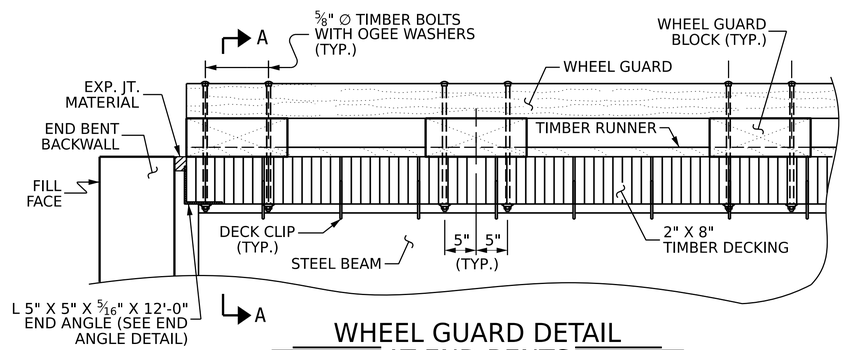

WHEEL GUARD DETAIL AT END BENTS

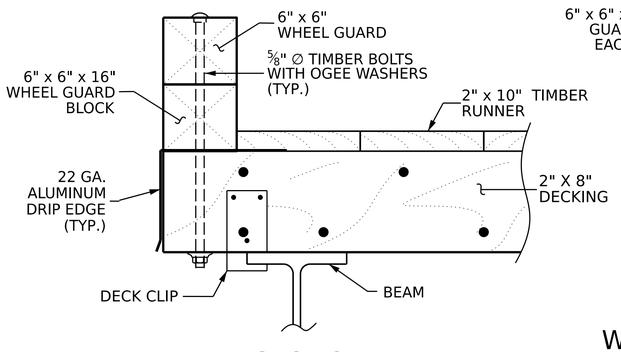

SECTION A-A

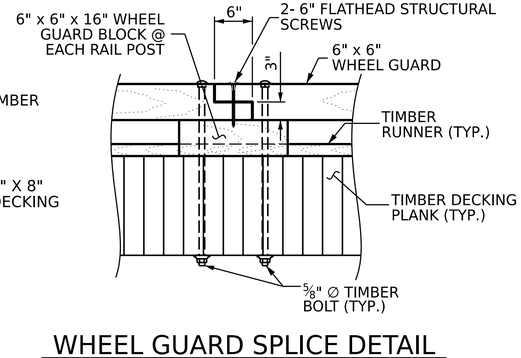

WHEEL GUARD SPLICE DETAIL

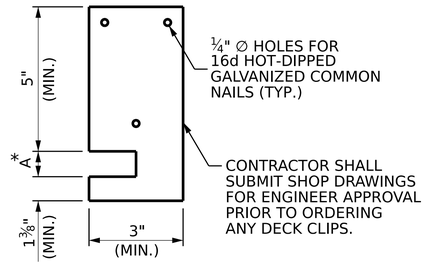

DECK CLIP DETAIL

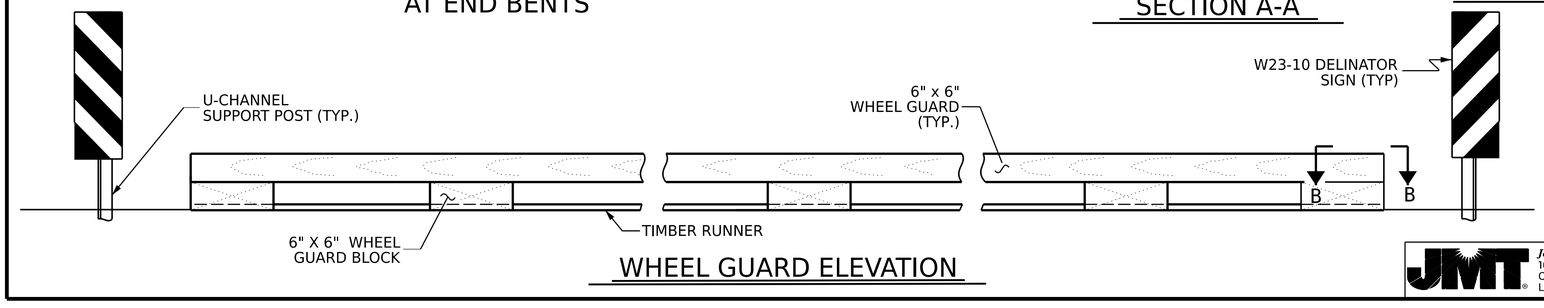

WHEEL GUARD ELEVATION

Digitally signed by Gwendolen F. Wilson
07/27/2026

DOCUMENT NOT CONSIDERED FINAL UNLESS ALL SIGNATURES COMPLETED

NORTH CAROLINA OFFICE OF
EMERGENCY MANAGEMENT

PRIVATE DRIVEWAY BRIDGE STANDARDS

SINGLE LANE STEEL BEAM BRIDGE
2X8 TIMBER DECK

TYPICAL SECTION & RAIL DETAILS

Johnson, Mirmiran, & Thompson Inc.
108 Asheville Commerce Parkway
Candler, NC, 28715
License No: C-3097

DWN. BY: BC DATE: 04/2026
CHKD. BY: GFW DATE: 04/2026
DES. EGR. OF RECORD: GFW DATE: 04/2026

REVISIONS						SHEET NO.
NO.	BY:	DATE:	NO.	BY:	DATE:	S-02
1			3			TOTAL SHEETS
2			4			14

wdcrafter
DGN: pw://jmt-pwbentley.com/jmt_pw_01/Documents/Projects/2025/25-00529/25-00529-001/Design/Structures/NC PRB-Steel Beam with Timber Deck Standards/Single Lane Steel Beam with Timber Deck Plans/2 Standard Drawings/20-70 FT - 12 FT DECK WIDTH/002-S2_Typical Sections.dgn
TIME: 7:25:2026

Docusign Envelope ID: 7DCAD729-896F-8434-8064-B80FB7A31D66

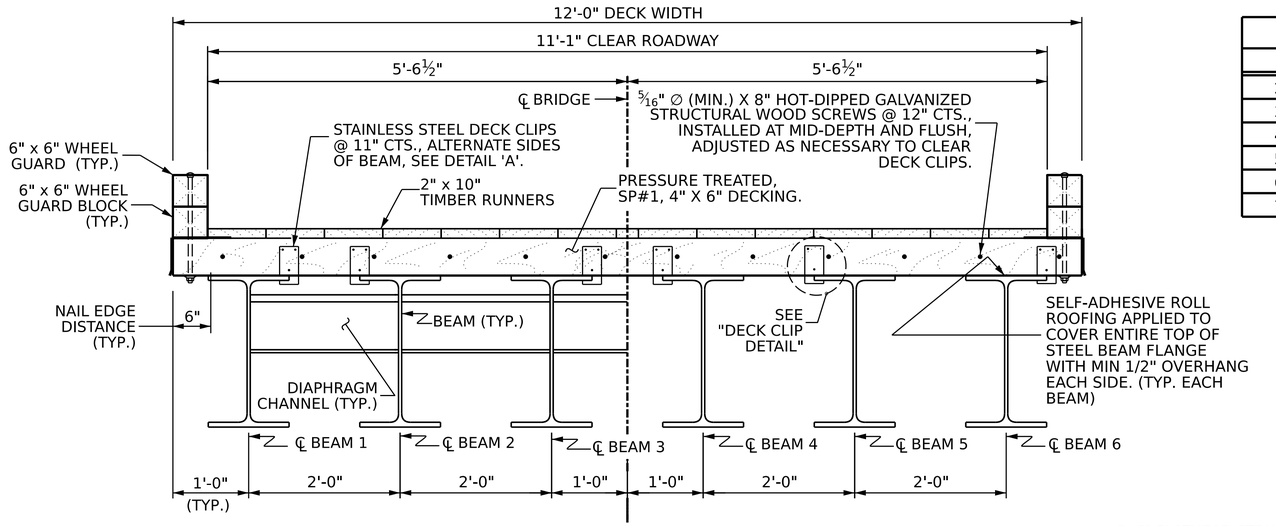

TYPICAL SECTION

MATERIALS TABLE				
SPAN	BEAM	DIAPHRAGM CHANNEL	DECK PLANK	DECKING SQ. FT.
20'-0"	W16X36	C12X20.7	4X6	244
30'-0"	W21X48	C12X20.7	4X6	364
40'-0"	W24X76	C12X20.7	4X6	484
50'-0"	W24X104	C12X20.7	4X6	604
60'-0"	W30X116	C12X20.7	4X6	724
70'-0"	W33X130	C12X20.7	4X6	844

NOTES

FOR TIMBER BRIDGE DECK SYSTEM DETAILS, SEE "PLAN OF SPAN" SHEET.

FOR OPTIONAL TIMBER RAILS, SEE ''OPTIONAL TIMBER BRIDGE RAIL'' SHEET.

FOR BEAM AND DIAPHRAGM DETAILS, SEE "FRAMING PLAN & BEAM DETAILS" SHEET.

TREAT ALL DRILLED OR NEWLY EXPOSED HOLES IN TIMBER MEMBERS BY PUMPING WITH BITUMINOUS ASPHALT-BASED ROOFING CEMENT, OR APPROVED PRESERVATIVE SYSTEM BEFORE INSTALLING HARDWARE.

SEE ''PLAN OF SPAN'' SHEET FOR NUMBER OF WHEEL GUARDS AND WHEEL GUARD SPACING.

STAINLESS STEEL DECK CLIPS SHALL BE FABRICATED FROM 12 GAUGE STEEL.

THE 2"X10" TIMBER RUNNERS SHALL BE LAID OUT SYMMETRICALLY ABOUT THE CENTERLINE OF THE BRIDGE. ANY REQUIRED WIDTH ADJUSTMENT SHALL BE MADE AT THE CENTER RUNNER.

PLACE 2X10 WEARING SURFACE BOARDS PARALLEL TO TRAFFIC WITH A UNIFORM ¼" CLEAR LONGITUDINAL GAP BETWEEN ADJACENT BOARDS. DO NOT BUTT BOARDS TIGHT. THIS GAP SHALL BE MAINTAINED TO FACILITATE SURFACE DRAINAGE AND PREVENT MOISTURE ENTRAPMENT AT THE INTERFACE OF THE STRUCTURAL DECK.

INSTALL 2X10 WEARING SURFACE BOARDS WITH GROWTH RINGS CURVING DOWNWARD TO PROMOTE DRAINAGE.

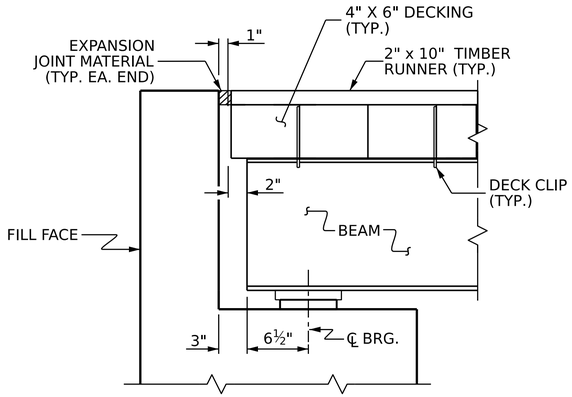

SECTION AT END BENT

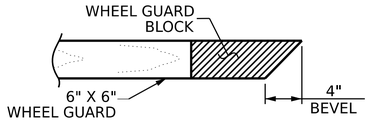

VIEW B-B

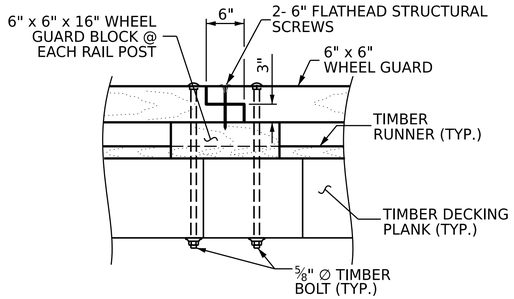

WHEEL GUARD SPLICE DETAIL

DECK CLIP DIMENSIONS		
SPAN	BEAM	*A
20'-0"	W16X36	½"
30'-0"	W21X48	½"
40'-0"	W24X76	¾"
50'-0"	W24X104	13/16"
60'-0"	W30X116	15/16"
70'-0"	W33X130	15/16"

* DIMENSION A IS FOR INFORMATION ONLY. IT IS BASED ON THE FLANGE THICKNESS PLUS A 1/16" TOLERANCE. THE CONTRACTOR SHALL VERIFY THIS DIMENSION WITH DECK CLIP SUPPLIER. THE DECK CLIP SHALL HAVE A SNUG FIT TO THE BEAM FLANGE.

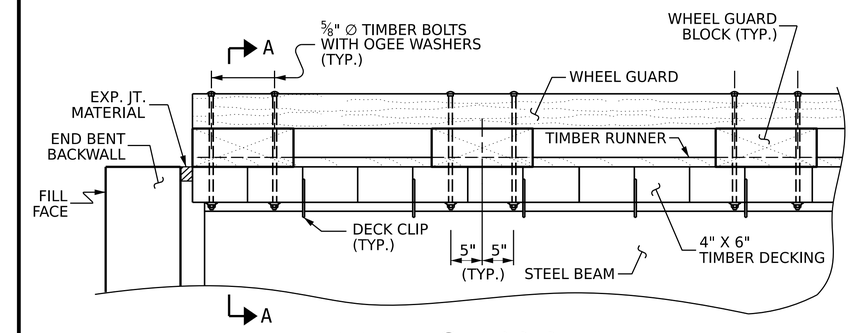

WHEEL GUARD DETAIL AT END BENTS

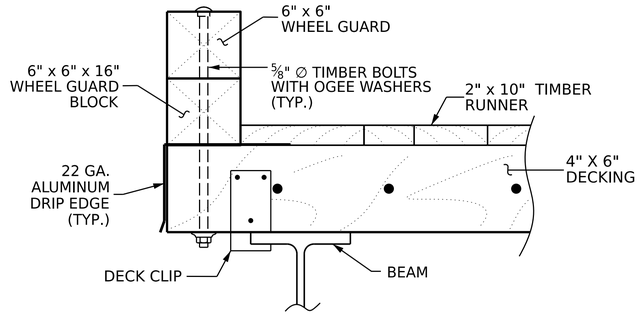

SECTION A-A

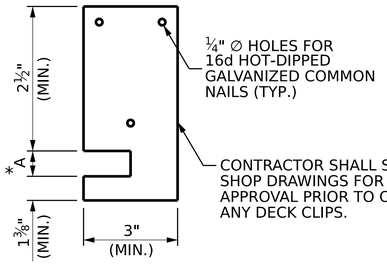

DECK CLIP DETAIL

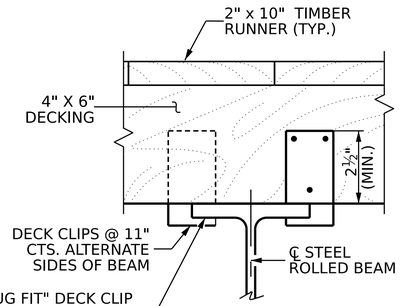

DETAIL 'A'

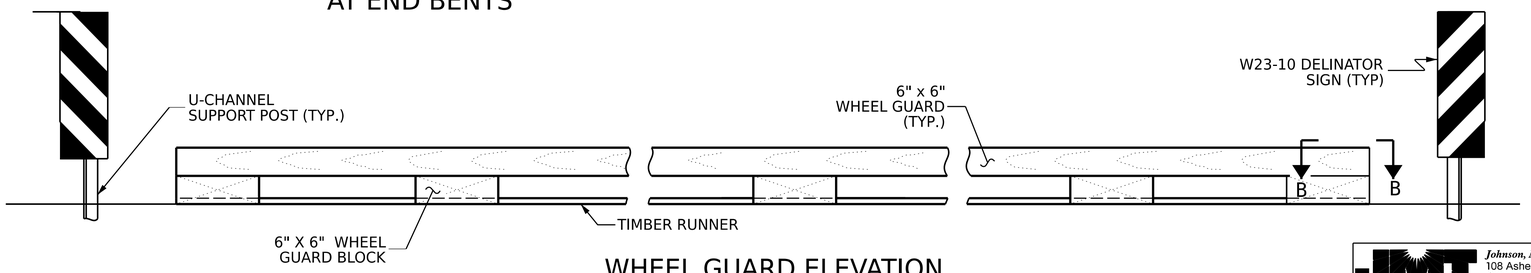

WHEEL GUARD ELEVATION

Docusigned by: Gwendolen F. Wilson F1F1E4AD2E8342C...
NORTH CAROLINA PROFESSIONAL SEAL 045282 ENGINEER GWENDOLEN F. WILSON
07/27/2026
DOCUMENT NOT CONSIDERED FINAL UNLESS ALL SIGNATURES COMPLETED

NORTH CAROLINA OFFICE OF
EMERGENCY MANAGEMENT

PRIVATE DRIVEWAY BRIDGE STANDARDS

SINGLE LANE STEEL BEAM BRIDGE
4X6 TIMBER DECK

OPTIONAL TYPICAL SECTION & RAIL DETAILS

JMT Johnson, Mirmiran, & Thompson Inc.
108 Asheville Commerce Parkway
Candler, NC, 28715
License No: C-3097

DWN. BY: BC DATE: 04/2026
CHKD. BY: GFW DATE: 04/2026
DES. EGR. OF RECORD: GFW DATE: 04/2026

REVISIONS					
NO.	BY:	DATE:	NO.	BY:	DATE:
1			3		
2			4		

SHEET NO. S-03
TOTAL SHEETS 14

w:\drucher
DGN: pw://jmt-pw.bentley.com/jmt-pw-01/Documents/Proj.lists/2025/25-00529/25-00529-001/Design/Structures/NC PRB-Steel Beam with Timber Deck Standards/Single Lane Steel Beam with Timber Deck Plans\2 Standard Drawings\20-70 FT - 12 FT DECK WIDTH\003-S3_Optional Typical Sect\ondgn
TIME: 7/25/2026

Docusign Envelope ID: 7DCAD729-896F-8434-8064-B80FB7A31D66

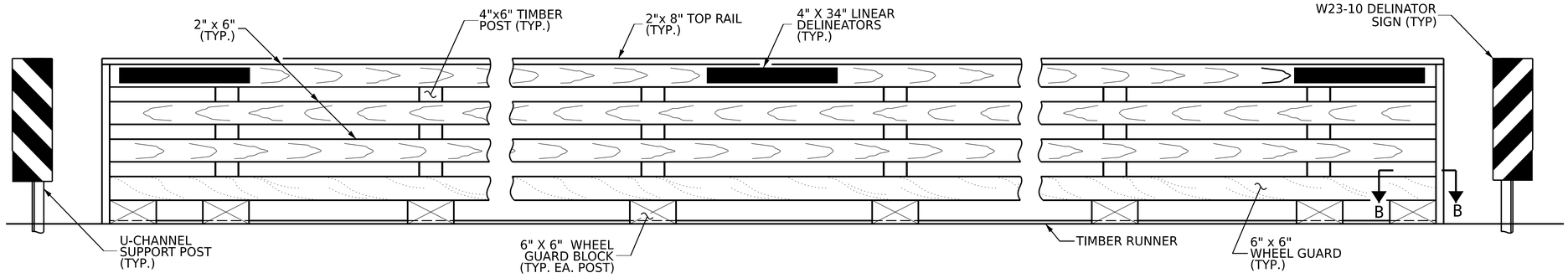

ELEVATION OF OPTIONAL BRIDGE RAIL

OPTIONAL BRIDGE RAIL NOTES

BRIDGE RAILS SHALL BE CONTINUOUS FROM END POST TO END POST WITH NO GAPS. RAIL LUMBER LENGTHS SHALL BE ATTACHED TO A MINIMUM OF THREE POSTS.

TREAT ALL DRILLED OR NEWLY EXPOSED HOLES IN TIMBER MEMBERS BY PUMPING WITH BITUMINOUS ASPHALT-BASED ROOFING CEMENT, OR APPROVED PRESERVATIVE SYSTEM BEFORE INSTALLING HARDWARE.

SEE ''PLAN OF SPAN'' SHEET FOR NUMBER OF POSTS AND POST SPACING.

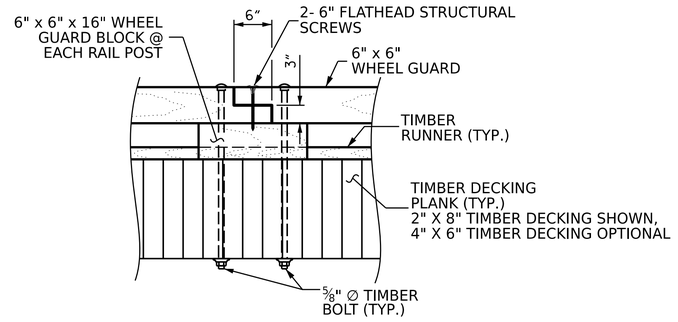

WHEEL GUARD SPLICE DETAIL

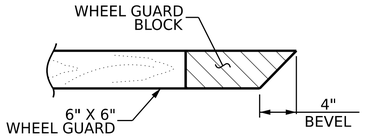

VIEW B-B

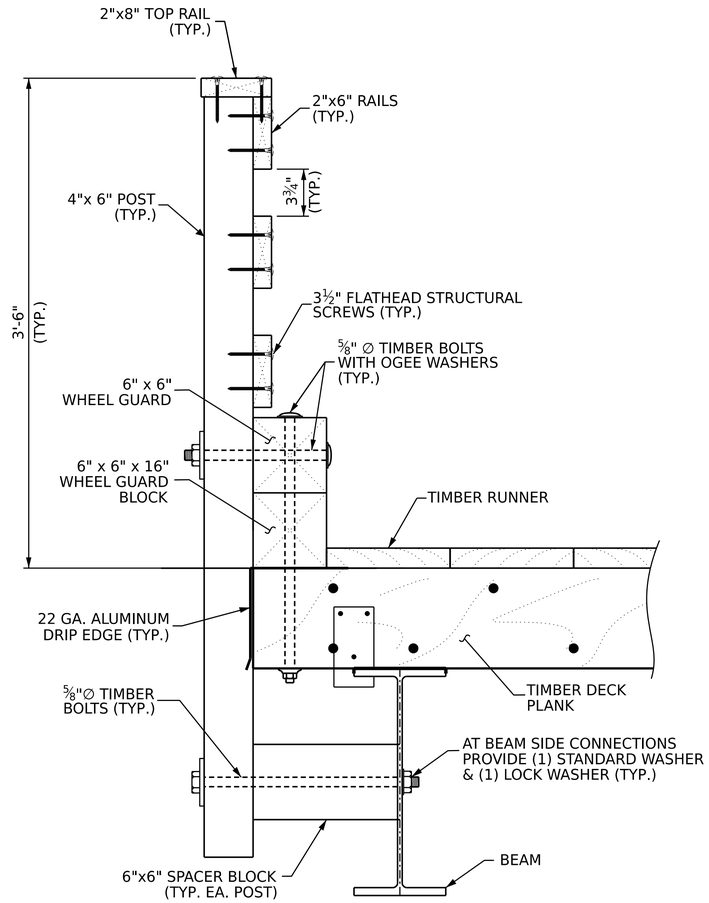

SECTION A-A

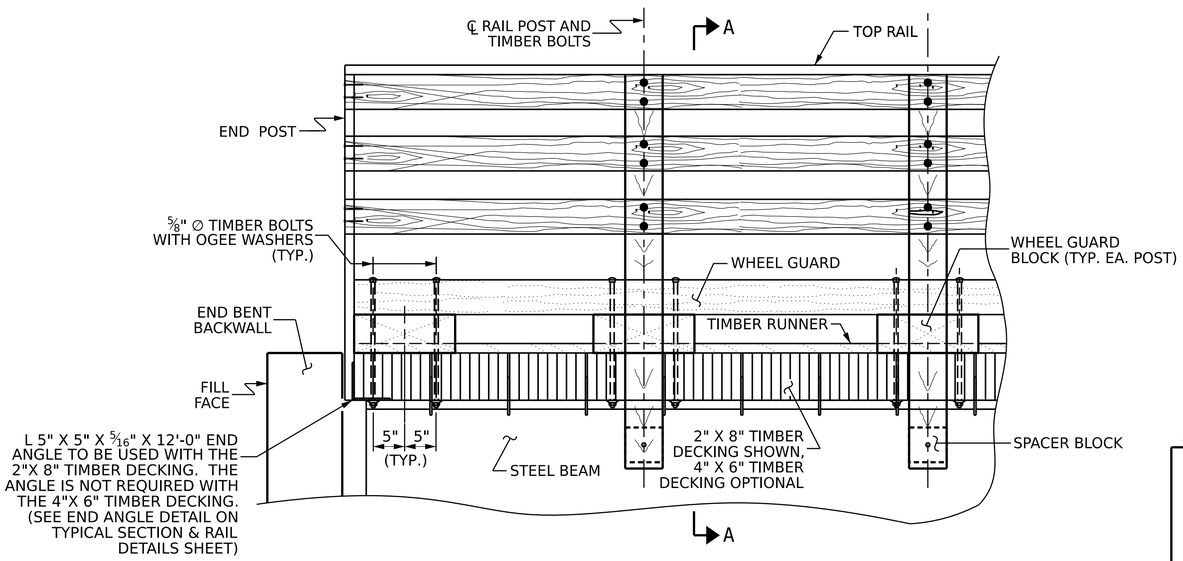

OPTIONAL RAIL DETAIL AT END BENTS

NORTH CAROLINA PROFESSIONAL SEAL 045282 ENGINEER GWENDOLEN F. WILSON
07/27/2026

DOCUMENT NOT CONSIDERED FINAL UNLESS ALL SIGNATURES COMPLETED

NORTH CAROLINA OFFICE OF
EMERGENCY MANAGEMENT

PRIVATE DRIVEWAY BRIDGE STANDARDS

SINGLE LANE STEEL BEAM BRIDGE
TIMBER DECK

OPTIONAL TIMBER BRIDGE RAIL

Johnson, Mirmiran, & Thompson Inc.
108 Asheville Commerce Parkway
Candler, NC, 28715
License No: C-3097

DWN. BY: BC DATE: 04/2026
CHKD. BY: GFW DATE: 04/2026
DES. EGR. OF RECORD: GFW DATE: 04/2026

REVISIONS					
NO.	BY:	DATE:	NO.	BY:	DATE:
1			3		
2			4		

SHEET NO. S-04
TOTAL SHEETS 14

w:\cr\cfcter
DGN: pw:// [mt~pw.bentley.com/mt~pw~0i/Documents/Projects/2025/25-00529/25-00529-001/Design/Structures/NC PRB-Steel Beam with Timber Deck Standards/Single Lane Steel Beam with Timber Deck Plans/2 Standard Drawings/20-70 FT - 12 FT DECK WIDTH/004-54 Optional Bridge Raildgn
TIME: 1:25:12 2026

Docusign Envelope ID: 7DCAD729-896F-8434-8064-B80FB7A31D66

DIMENSIONS TABLE				
SPAN	A	B	C	D
20'-0"	20'-0"	22'-6"	5 SPA. @ 3'-8"	10"
30'-0"	30'-0"	32'-6"	7 SPA. @ 4'-0"	1'-0"
40'-0"	40'-0"	42'-6"	9 SPA. @ 4'-3"	10½"
50'-0"	50'-0"	52'-6"	11 SPA. @ 4'-4"	1'-2"
60'-0"	60'-0"	62'-6"	13 SPA. @ 4'-5½"	1'-0¼"
70'-0"	70'-0"	72'-6"	15 SPA. @ 4'-6"	1'-3"

NOTES

FOR ADDITIONAL NOTES, SEE "TYPICAL SECTION & RAIL DETAILS" SHEET, "OPTIONAL TYPICAL SECTION & RAIL DETAILS", AND "GENERAL NOTES" SHEET.

COUNTERSINK FLATHEAD STRUCTURAL TIMBER SCREW HEADS TO BE FLUSH WITH TIMBER SURFACE.

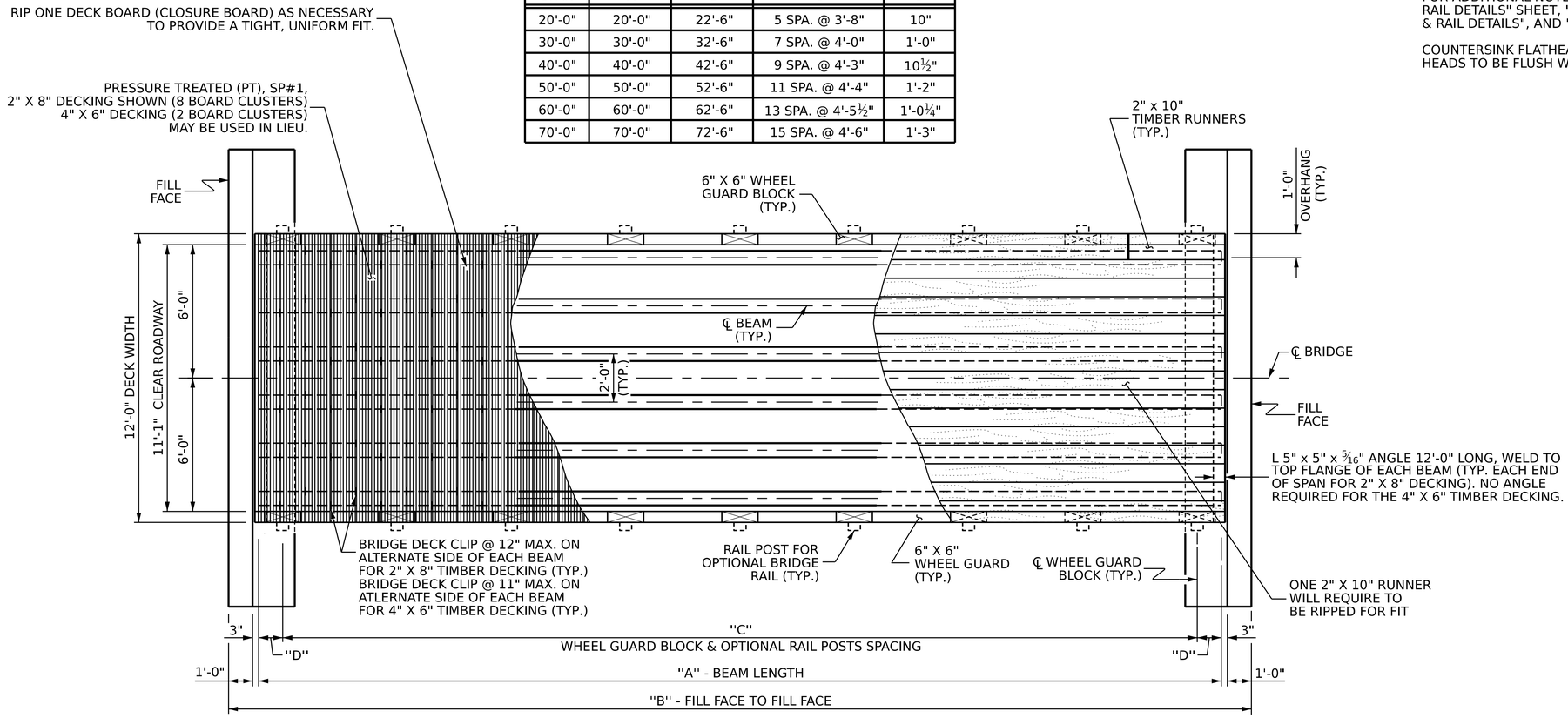

END BENT 1

END BENT 2

DECK LAYOUT

2" X 8" TIMBER DECKING SHOWN. 4" X 6" TIMBER DECKING (6" DIMENSION HORIZONTAL) MAY BE USED IN LIEU OF 2" X 8" DECKING.

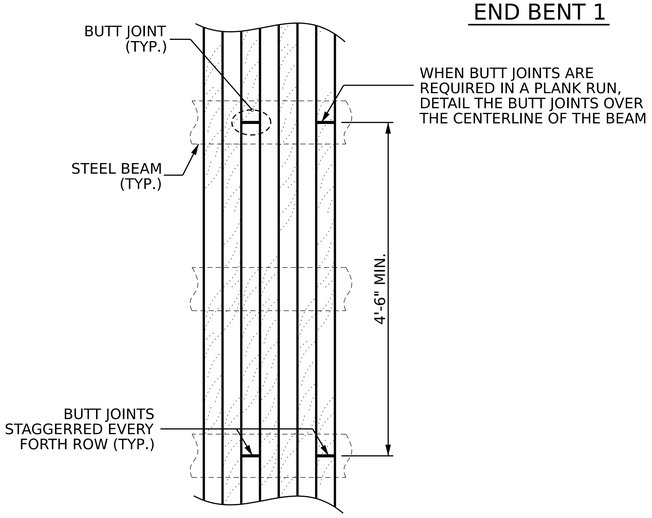

DECKING BOARD BUTT JOINT DETAIL

BUTT JOINTS SHALL BE OVER THE CENTERLINE OF A BEAM. JOINTS SHALL BE STAGGERED EVERY FOURTH DECK BOARD. NONE ALLOWED AT THE EXTERIOR BEAMS.

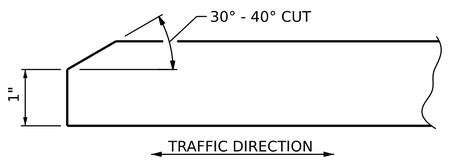

SIDE VIEW

TIMBER RUNNER BEVEL DETAIL

(TYP. AT EACH END OF BRIDGE)

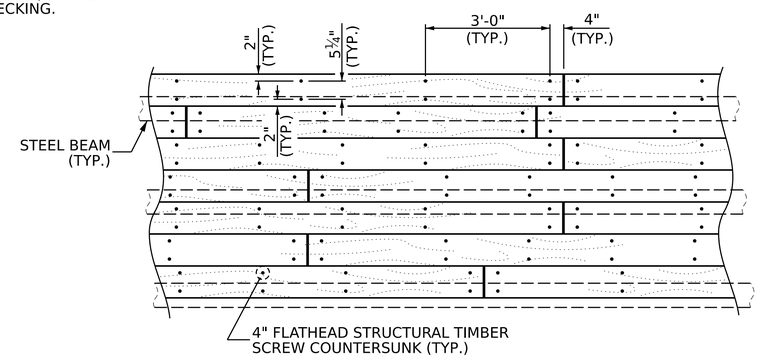

TIMBER RUNNER BUTT JOINT DETAIL

NORTH CAROLINA PROFESSIONAL SEAL 045282 ENGINEER GWENDOLEN F. WILSON

07/27/2026

DOCUMENT NOT CONSIDERED FINAL UNLESS ALL SIGNATURES COMPLETED

NORTH CAROLINA OFFICE OF
EMERGENCY MANAGEMENT

PRIVATE DRIVEWAY BRIDGE STANDARDS

SINGLE LANE STEEL BEAM BRIDGE
TIMBER DECK

PLAN OF SPAN

Johnson, Mirmiran, & Thompson Inc.
108 Asheville Commerce Parkway
Candler, NC, 28715
License No: C-3097

DWN. BY: BC DATE: 04/2026
CHKD. BY: GFW DATE: 04/2026
DES. EGR. OF RECORD: GFW DATE: 04/2026

REVISIONS					
NO.	BY:	DATE:	NO.	BY:	DATE:
1			3		
2			4		

SHEET NO. S-05
TOTAL SHEETS 14

w:\cru\cru\
DGN: pw:// jmt-pw.bentley.com/jmt-pw-01/Documents/Projects/2025/25-00529/25-00529-001/Design/Structures/NC PRB-Steel Beam with Timber Deck Standards/Single Lane Steel Beam with Timber Deck Plans/2 Standard Drawings/20-70 FT - 12 FT DECK WIDTH/005-S5_Plan of Spandgn
TIME: 11:25:2026

Docusign Envelope ID: 7DCAD729-896F-8434-8064-B80FB7A31D66

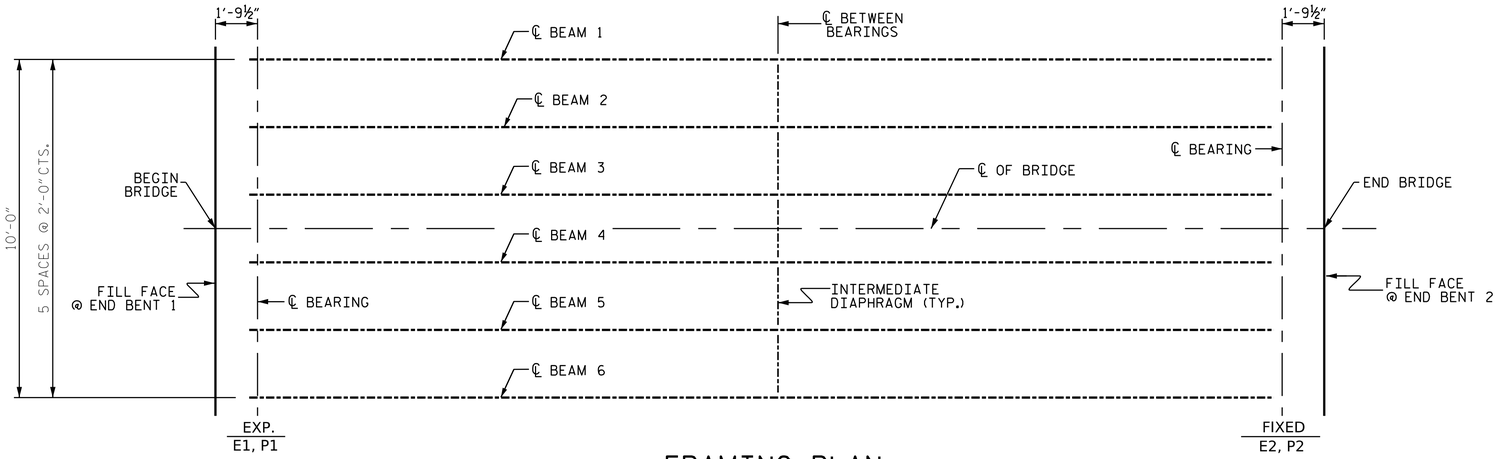

FRAMING PLAN

EXPANSION BEARING SHALL BE PLACED ON THE "UPHILL" END OF THE BRIDGE.

BEAM FLANGE ELEVATION

SHOWING DIAPHRAGM HOLES FOR ALL BEAMS, AND RAIL POST HOLES FOR EXTERIOR BEAMS.

BEAM DIMENSION TABLE

SPAN	BEAM	CHANNEL	A	B	C	D	E
20'-0"	W16X36	C12X20.7	20'-0"	2 SPA. @ 7'-0"	3'-0"	10"	5 SPA. @ 3'-8"
30'-0"	W21X48	C12X20.7	30'-0"	2 SPA @ 12'-0"	3'-0"	1'-0"	7 SPA. @ 4'-0"
40'-0"	W24X76	C12X20.7	40'-0"	2 SPA. @ 17'-0"	3'-0"	10½"	9 SPA. @ 4'-3"
50'-0"	W24X104	C12X20.7	50'-0"	2 SPA. @ 22'-0"	3'-0"	1'-2"	11 SPA. @ 4'-4"
60'-0"	W30X116	C12X20.7	60'-0"	4 SPA. @ 13'-6"	3'-0"	1'-0¼"	13 SPA. @ 4'-5½"
70'-0"	W33X130	C12X20.7	70'-0"	4 SPA. @ 16'-0"	3'-0"	1'-3"	15 SPA. @ 4'-6"

SECTION VIEW - BRG. STIFFENER

STIFFENER DIMENSION

BEAM	F	G	H
W16X36	1'-3"	3⅜"	2"
W21X48	1'-7¾"	3⅞"	2"
W24X76	1'-10⁹⁄₁₆"	4¼"	2⁷⁄₁₆"
W24X104	1'-10⁹⁄₁₆"	6⅛"	2¾"
W30X116	2'-4¼"	5"	3¹⁄₁₆"
W33X130	2'-7⅜"	5½"	3⅛"

NOTES

NO SALVAGED BEAMS SHALL BE USED, UNLESS OTHERWISE NOTED ON THE PLANS.

NO SHOP CAMBER REQUIRED, TURN NATURAL MILL CAMBER UP.

ALL STRUCTURAL STEEL FIELD CONNECTIONS SHALL BE ⅝" DIA. GALVANIZED HIGH STRENGTH BOLTS UNLESS OTHERWISE NOTED.

BEAMS SHALL BE PLACED PARALLEL TO THE CHORD.

CONTRACTORS OPTION TO WELD CONNECTOR TO BEAM PRIOR TO SHOP COATING.

SEE "GENERAL NOTES" SHEET FOR COATING.

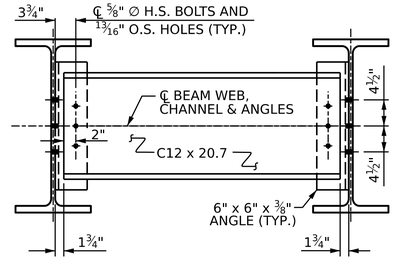

DIAPHRAGM DETAILS

ANGLE DETAILS

NORTH CAROLINA PROFESSIONAL ENGINEER SEAL 045282 GWENDOLEN F. WILSON
07/27/2026

DOCUMENT NOT CONSIDERED FINAL UNLESS ALL SIGNATURES COMPLETED

NORTH CAROLINA OFFICE OF
EMERGENCY MANAGEMENT

PRIVATE DRIVEWAY BRIDGE STANDARDS

SINGLE LANE STEEL BEAM BRIDGE
TIMBER DECK

FRAMING PLAN & BEAM DETAILS

Johnson, Mirmiran, & Thompson Inc.
108 Asheville Commerce Parkway
Candler, NC, 28715
License No: C-3097

DWN. BY: BC DATE: 04/2026
CHKD. BY: GFW DATE: 04/2026
DES. EGR. OF RECORD: GFW DATE: 04/2026

REVISIONS						SHEET NO.
NO.	BY:	DATE:	NO.	BY:	DATE:	S-06
1			3			TOTAL SHEETS
2			4			14

wdrcutter
DGN: P:\mt-pw.bentley.com\mt-pw-01\Documents\Projects\2025\25-00529\25-00529-001\Design\Structures\NC PRB-Steel Beam with Timber Deck Standards\Single Lane Steel Beam with Timber Deck Plans\2 Standard Drawings\20-70 FT - 12 FT DECK WIDTH\006-56_Framing Plan.dgn
TIME: 7/25/2025

Docusign Envelope ID: 7DCAD729-896F-8434-8064-B80FB7A31D66

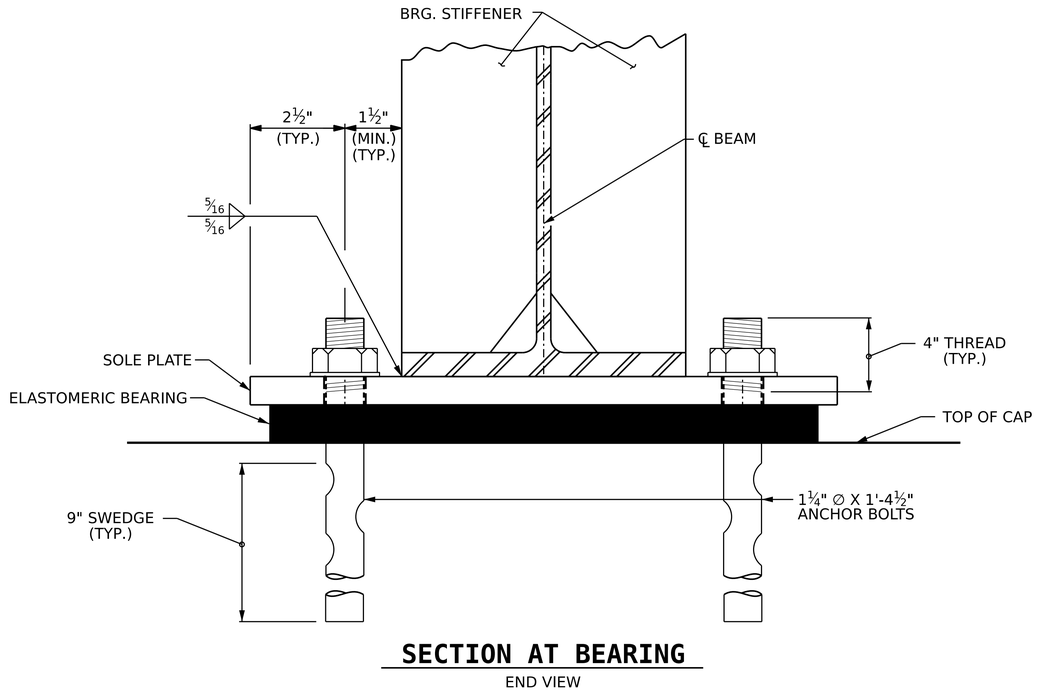

SECTION AT BEARING

END VIEW

NOTES

ELASTOMER IN ALL BEARINGS SHALL BE 50 DUROMETER HARDNESS IN ACCORDANCE WITH THE STANDARD SPECIFICATIONS.

AT ALL SUPPORTS, NUTS FOR ANCHOR BOLTS ARE TO BE TIGHTENED FINGER TIGHT AND THEN BACKED OFF ½ TURN. THE THREAD OF THE NUT AND BOLT SHALL THEN BE BURRED WITH A SHARP POINTED TOOL.

SOLE PLATES, ANCHOR BOLTS, NUTS AND WASHERS SHALL BE GALVANIZED IN ACCORDANCE WITH THE STANDARD SPECIFICATIONS.

ALL BEARING PLATES SHALL BE AASHTO M270 GRADE 36.

ANCHOR BOLTS SHALL MEET THE REQUIREMENTS OF ASTM A449. NUTS SHALL MEET THE REQUIREMENTS OF AASHTO M291-DH OR AASHTO M292-2H. WASHERS SHALL MEET THE REQUIREMENTS OF AASHTO M293. SHOP DRAWINGS ARE NOT REQUIRED FOR ANCHOR BOLTS, NUTS, AND WASHERS. SHOP INSPECTION IS REQUIRED.

AT THE APPROVAL OF THE ENGINEER, SOLE PLATES AT THE EXPANSION END MAY BE FIELD WELDED.

WHEN FIELD WELDING THE SOLE PLATE TO THE GIRDER FLANGE, USE TEMPERATURE INDICATING WAX PENS, OR OTHER SUITABLE MEANS, TO ENSURE THAT THE TEMPERATURE OF THE SOLE PLATE DOES NOT EXCEED 300° F. TEMPERATURES ABOVE THIS MAY DAMAGE THE ELASTOMER.

ALL SURFACES OF BEARING PLATES SHALL BE SMOOTH AND STRAIGHT.

AT NO ADDITIONAL COST, THE CONTRACTOR MAY USE ADHESIVELY ANCHORED ANCHOR BOLTS IN PLACE OF CAST-IN-PLACE ANCHORS. LEVEL 1 FIELD TESTING IS REQUIRED, AND THE YIELD LOAD OF THE ANCHOR BOLT IS 30 KIPS. FOR ADHESIVELY ANCHORED ANCHOR BOLTS OR DOWELS, SEE STANDARD SPECIFICATIONS.

ADHESIVELY ANCHORED ANCHOR BOLTS SHALL BE THREADED FULL LENGTH.

DIMENSIONS TABLE

SPAN	BEAM	FLANGE WIDTH	TYPE	A	B	C
20'-0"	W16X36	7"	I	11"	1'-3"	1'-4"
30'-0"	W21X48	8⅛"	II	1'-1"	1'-5"	1'-6"
40'-0"	W24X76	9"	II	1'-1"	1'-5"	1'-6"
50'-0"	W24X104	12¾"	III	1'-4"	1'-8"	1'-9"
60'-0"	W30X116	10½"	IV	1'-3"	1'-7"	1'-8"
70'-0"	W33X130	11½"	IV	1'-3"	1'-7"	1'-8"

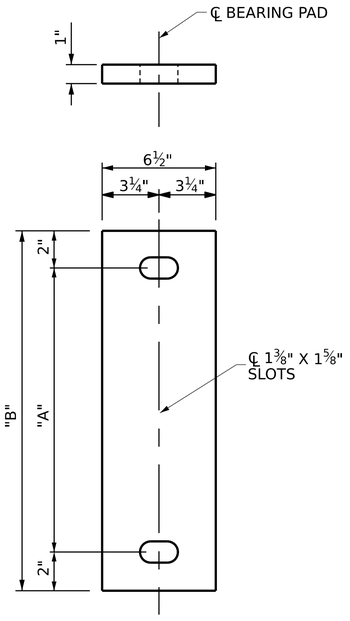

E1 ELASTOMERIC BEARING DETAILS
(6 REQ'D)
EXPANSION

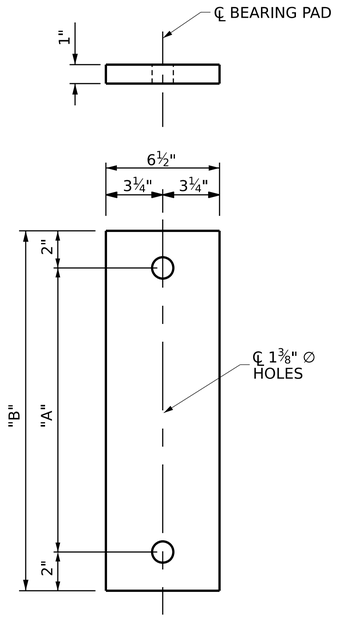

E2 ELASTOMERIC BEARING DETAILS
(6 REQ'D)
FIXED

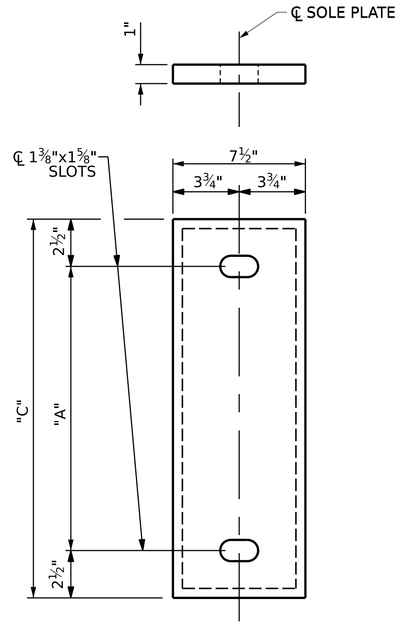

P1 SOLE PLATE DETAILS
(6 REQ'D)
EXPANSION

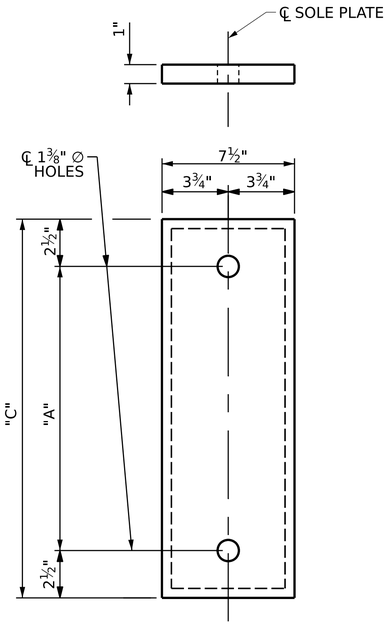

P2 SOLE PLATE DETAILS
(6 REQ'D)
FIXED

NORTH CAROLINA PROFESSIONAL SEAL 045282 ENGINEER GWENDOLEN F. WILSON
07/27/2026
DOCUMENT NOT CONSIDERED FINAL UNLESS ALL SIGNATURES COMPLETED

NORTH CAROLINA OFFICE OF
EMERGENCY MANAGEMENT

PRIVATE DRIVEWAY BRIDGE STANDARDS

SINGLE LANE STEEL BEAM BRIDGE
TIMBER DECK

BEARING DETAILS

Johnson, Mirmiran, & Thompson Inc.
108 Asheville Commerce Parkway
Candler, NC, 28715
License No: C-3097

DWN. BY: BC DATE: 04/2026
CHKD. BY: GFW DATE: 04/2026
DES. EGR. OF RECORD: GFW DATE: 04/2026

REVISIONS					
NO.	BY:	DATE:	NO.	BY:	DATE:
1			3		
2			4		

SHEET NO. S-07
TOTAL SHEETS 14

wdcrutcher
DGN: pw://jmt-pw.bentley.com/jmt-pw-01/Documents/Projects/2025/25-00529/25-00529-001/Design/Structures/NC PRB-Steel Beam with Timber Deck Standards/Single Lane Steel Beam with Timber Deck Plans/2 Standard Drawings/20-70 FT - 12 FT DECK WIDTH/007-ST_Bearing Details.dgn
TIME: 7/25/2026

Docusign Envelope ID: 7DCAD729-896F-8434-8064-B80FB7A31D66

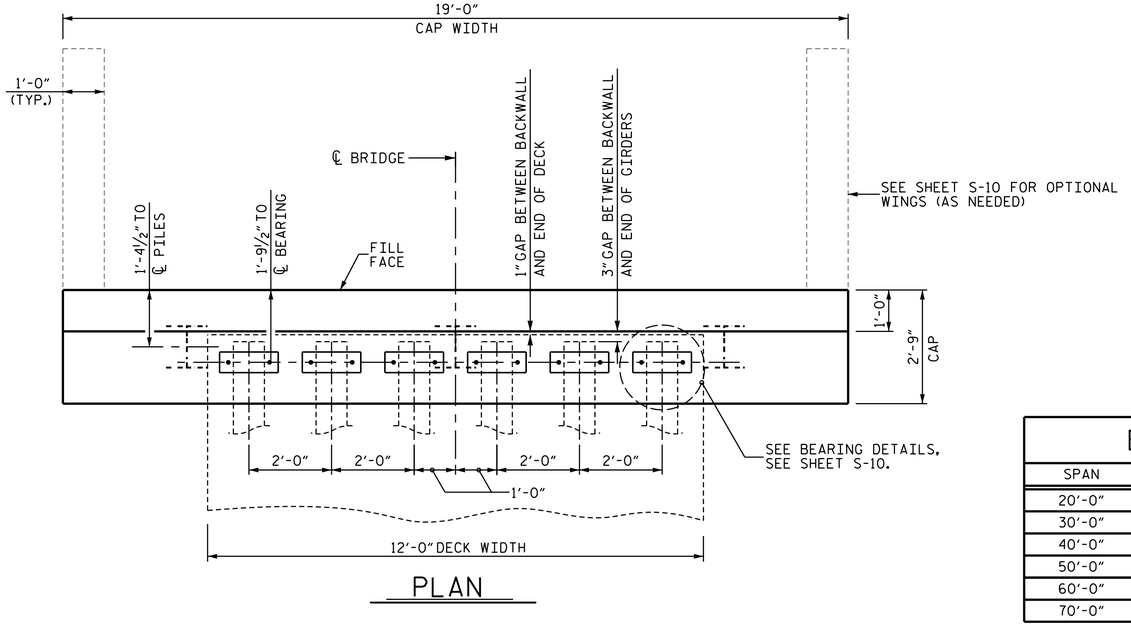

PLAN

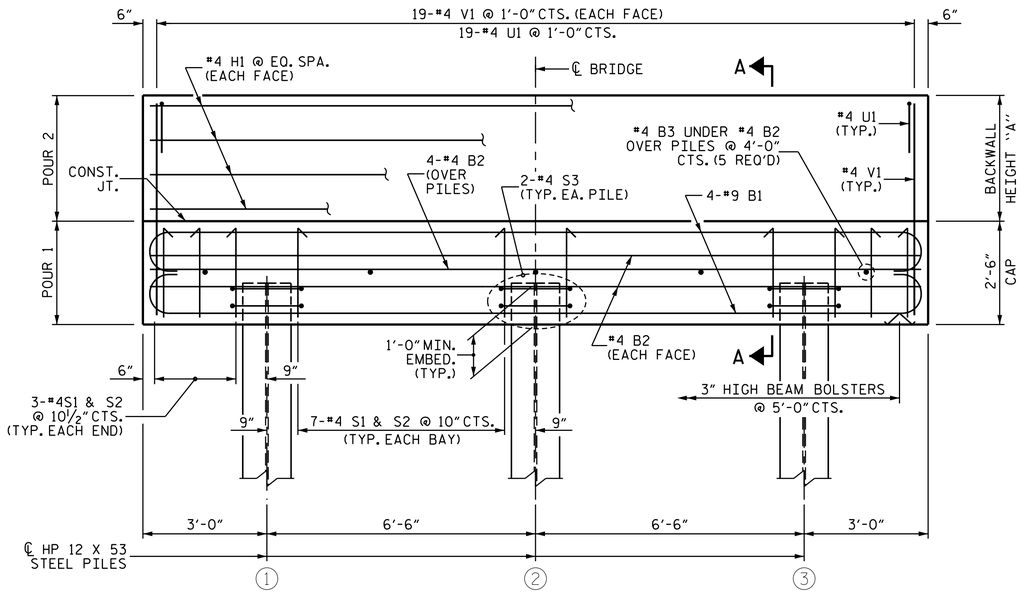

ELEVATION

(OPTIONAL WINGS NOT SHOWN FOR CLARITY)

BAR TYPES

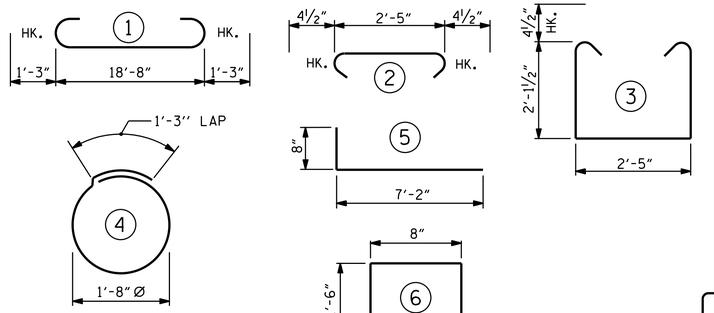

ADDITIONAL BARS FOR 2 OPTIONAL WINGS

ALL BAR DIMENSIONS ARE OUT TO OUT.

BILL OF MATERIAL

FOR ONE END BENT

BAR	NO.	SIZE	TYPE	LENGTH	WEIGHT
B1	8	#9	1	21'-2"	576
B2	8	#4	STR	18'-8"	100
B3	5	#4	STR	2'-5"	8
H1	8	#4	STR	18'-8"	100
S1	20	#4	3	7'-5"	99
S2	20	#4	2	3'-2"	42
S3	6	#4	4	6'-6"	26
U1	19	#4	6	3'-8"	47
V1	38	#4	STR	4'-4"	110
H2	28	#4	5	7'-10"	147
V2	56	#4	STR	3'-2"	118

	W/O WINGS	WITH WINGS
REINFORCING STEEL (FOR ONE END BENT) (LBS.) ✳	1,108	1,373
CLASS A CONCRETE (FOR ONE END BENT) (C.Y.)		
POUR 1	4.8	6.0
POUR 2 ✳	1.7	2.8
TOTAL	6.5	8.8

✳ REINFORCING AND CONCRETE QUANTITIES ARE BASED ON THE SHORTEST BACKWALL HEIGHT USING 2X8 DECKING. CONTRACTOR SHALL ADJUST FOR 4X6 DECKING OR INCREASED BACKWALL HEIGHT.

BACKWALL HEIGHT

SPAN	BEAM	A (2X8 DECKING)	A (4X6 DECKING)
20'-0"	W16X36	2'-2⅝"	1'-10⅞"
30'-0"	W21X48	2'-7⅜"	2'-3⅝"
40'-0"	W24X76	2'-10⅝"	2'-6⅞"
50'-0"	W24X104	2'-10¾"	2'-7"
60'-0"	W30X116	3'-4¾"	3'-1"
70'-0"	W33X130	3'-7¾"	3'-4"

DIMENSION "A" (BACKWALL HEIGHT) VARIES BASED ON DECKING TYPE. USE VALUES CORRESPONDING TO SELECTED DECKING OPTION.

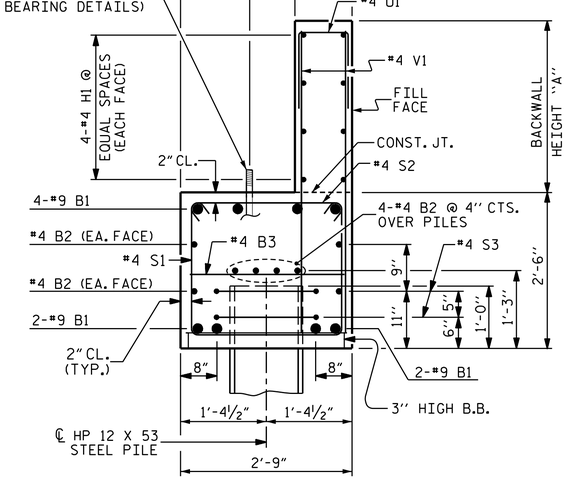

SECTION A-A

GENERAL NOTES

STIRRUPS IN CAP MAY BE SHIFTED AS NECESSARY TO CLEAR ANCHOR BOLTS.

CONTRACTOR SHALL SLOPE TOP OF CAP TO MATCH LONGITUDINAL GRADE OF THE BRIDGE. SLOPES SHALL MATCH ON BOTH END BENT 1 AND END BENT 2 CAPS.

WINGS MAY BE REQUIRED AT THE DIRECTION OF THE ENGINEER OR DESIGNEE.

FOR OPTIONAL WINGS FOR END BENT, SEE SHEET S-10.

FOR BEARING DETAILS, SEE SHEET S-10.

FOR PILE SPLICE DETAILS, SEE SHEET S-10.

"V" BARS BASED ON SHORTEST BACKWALL HEIGHT USING 2X8 DECKING. ADJUST LENGTH TO MAINTAIN REQUIRED MIN. CLEARANCE AT BOTTOM OF CAP AND TOP OF BACKWALL.

FOUNDATION NOTES

DRIVEN PILES

INSTALL PILES IN ACCORDANCE WITH SECTION 450 OF THE STANDARD SPECIFICATIONS.

DO NOT INSTALL PILES UNTIL FILL HAS BEEN PLACED.

DRIVE PILES TO A MINIMUM PENETRATION OF AT LEAST 10 FEET INTO NATURAL GROUND OR CHANNEL BOTTOM.

DRIVE ALL PILES TO "REFUSAL" BELOW MINIMUM PENETRATION.

PREDRILLING OR SPUDDING MAY BE REQUIRED TO ACHIEVE THE MINIMUM PILE PENETRATION.

SUBMIT THE PROPOSED PILE DRIVING METHODS AND EQUIPMENT FOR ACCEPTANCE BY THE ENGINEER.



DOCUMENT NOT CONSIDERED FINAL UNLESS ALL SIGNATURES COMPLETED

NORTH CAROLINA OFFICE OF
EMERGENCY MANAGEMENT

PRIVATE DRIVEWAY BRIDGE STANDARDS

SINGLE LANE STEEL BEAM BRIDGE
TIMBER DECK

END BENT
DRIVEN PILES

Johnson, Mirmiran, & Thompson Inc.
108 Asheville Commerce Parkway
Candler, NC. 28715
License No: C-3097

DWN. BY: BC DATE: 04/2026
CHKD. BY: GFW DATE: 04/2026
DES. EGR. OF RECORD: GFW DATE: 04/2026

REVISIONS					
NO.	BY:	DATE:	NO.	BY:	DATE:
1			3		
2			4		

SHEET NO. S-08
TOTAL SHEETS 14

w:\drafter
DGN: pw:// jmt-pw.bentley.com:jmt-pw-01\Documents\Projects\2025\25-00529\25-00529-001\Design\Structures\NC FRB-Steel Beam with Timber Deck Standards\Single Lane Steel Beam with Timber Deck Plans\2 Standard Drawings\20-70 FT - 12 FT DECK WIDTH\008-S8_End Bent_Driven Piles.dgn
TIME: 7:25:2026

Docusign Envelope ID: 7DCAD729-896F-8434-8064-B80FB7A31D66

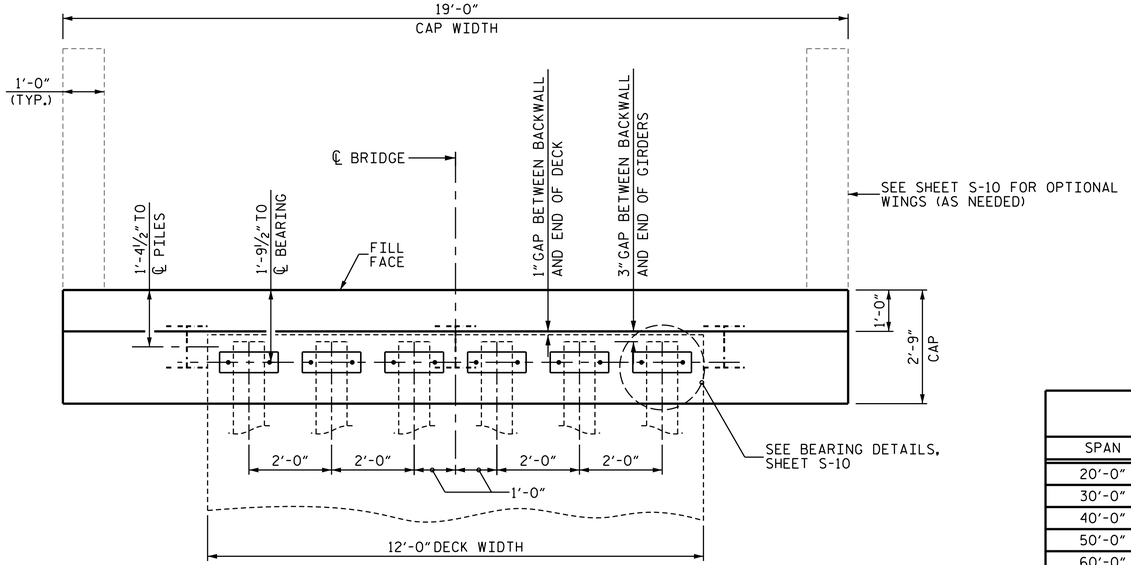

PLAN

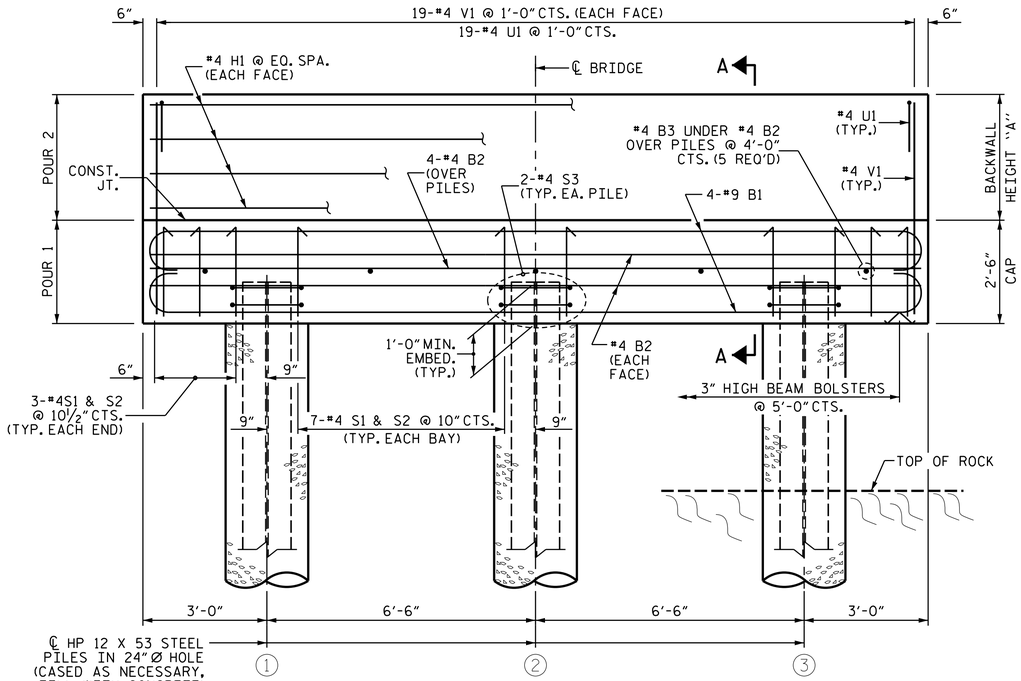

ELEVATION

(OPTIONAL WINGS NOT SHOWN FOR CLARITY)

BAR TYPES

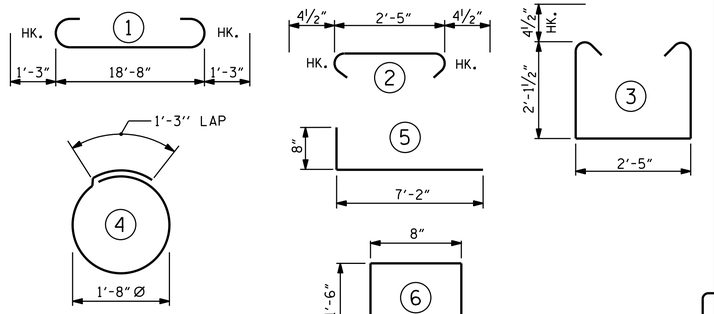

ALL BAR DIMENSIONS ARE OUT TO OUT.

BILL OF MATERIAL

FOR ONE END BENT

BAR	NO.	SIZE	TYPE	LENGTH	WEIGHT
B1	8	#9	1	21'-2"	576
B2	8	#4	STR	18'-8"	100
B3	5	#4	STR	2'-5"	8
H1	8	#4	STR	18'-8"	100
S1	20	#4	3	7'-5"	99
S2	20	#4	2	3'-2"	42
S3	6	#4	4	6'-6"	26
U1	19	#4	6	3'-8"	47
V1	38	#4	STR	4'-4"	110
H2	28	#4	5	7'-10"	147
V2	56	#4	STR	3'-2"	118

ADDITIONAL BARS FOR 2 OPTIONAL WINGS

	W/O WINGS	WITH WINGS
REINFORCING STEEL (FOR ONE END BENT) (LBS.) ✳	1,108	1,373
CLASS A CONCRETE (FOR ONE END BENT) (C.Y.)		
POUR 1	4.8	6.0
POUR 2 ✳	1.7	2.8
TOTAL	6.5	8.8

✳ REINFORCING AND CONCRETE QUANTITIES ARE BASED ON THE SHORTEST BACKWALL HEIGHT USING 2X8 DECKING. CONTRACTOR SHALL ADJUST FOR 4X6 DECKING OR INCREASED BACKWALL HEIGHT.

BACKWALL HEIGHT

SPAN	BEAM	A (2X8 DECKING)	A (4X6 DECKING)
20'-0"	W16X36	2'-2⅝"	1'-10⅞"
30'-0"	W21X48	2'-7⅜"	2'-3⅝"
40'-0"	W24X76	2'-10⅝"	2'-6⅞"
50'-0"	W24X104	2'-10¾"	2'-7"
60'-0"	W30X116	3'-4¾"	3'-1"
70'-0"	W33X130	3'-7¾"	3'-4"

DIMENSION "A" (BACKWALL HEIGHT) VARIES BASED ON DECKING TYPE. USE VALUES CORRESPONDING TO SELECTED DECKING OPTION.

GENERAL NOTES

STIRRUPS IN CAP MAY BE SHIFTED AS NECESSARY TO CLEAR ANCHOR BOLTS.

CONTRACTOR SHALL SLOPE TOP OF CAP TO MATCH LONGITUDINAL GRADE OF THE BRIDGE. SLOPES SHALL MATCH ON BOTH END BENT 1 AND END BENT 2 CAPS.

WINGS MAY BE REQUIRED AT THE DIRECTION OF THE ENGINEER OR DESIGNEE.

FOR OPTIONAL WINGS FOR END BENT, SEE SHEET S-10.

FOR BEARING DETAILS, SEE SHEET S-10.

FOR PILE SPLICE DETAILS, SEE SHEET S-10.

"V" BARS BASED ON SHORTEST BACKWALL HEIGHT USING 2X8 DECKING. ADJUST LENGTH TO MAINTAIN REQUIRED MIN. CLEARANCE AT BOTTOM OF CAP AND TOP OF BACKWALL.

FOUNDATION NOTES

DRILLED-IN PILES

ROCK QUALITY DESIGNATION (RQD)
GEOLOGICAL STRENGTH INDEX (GSI)

INSTALL DRILLED-IN PILES IN ACCORDANCE WITH SECTION 450 OF THE STANDARD SPECIFICATIONS.

MINIMUM PILE PENETRATION OF 10-FT INTO NATURAL GROUND OR CHANNEL BOTTOM IS REQUIRED.

MINIMUM ROCK SOCKET DEPTHS, UNLESS OTHERWISE INDICATED ON PROJECT SPECIFIC DATA SHEET:

4' MINIMUM (RQD >70, GSI >50)
6' MINIMUM (RQD 30-70, GSI 30-50)
8' MINIMUM (RQD <30, GSI <30)

REFER TO BORING LOGS FOR RQD AND GSI DATA.

PILES SHALL BE SEATED IN THE BOTTOM OF THE EXCAVATION. PILE DRIVING IS NOT REQUIRED.

BACKFILL WITH CONCRETE ONLY. DO NOT PROCEED WITH CONSTRUCTION ACTIVITIES UNTIL THE 28 DAY STRENGTH IS ACHIEVED.

SECTION A-A

SHEET 1 OF 2

NORTH CAROLINA PROFESSIONAL SEAL 045282 ENGINEER GWENDOLEN F. WILSON
07/27/2026

DOCUMENT NOT CONSIDERED FINAL UNLESS ALL SIGNATURES COMPLETED

NORTH CAROLINA OFFICE OF
EMERGENCY MANAGEMENT

PRIVATE DRIVEWAY BRIDGE STANDARDS

SINGLE LANE STEEL BEAM BRIDGE
TIMBER DECK

END BENT
DRILLED-IN PILES

JMT Johnson, Mirmiran, & Thompson Inc.
108 Asheville Commerce Parkway
Candler, NC, 28715
License No: C-3097

DWN. BY: BC DATE: 04/2026
CHKD. BY: GFW DATE: 04/2026
DES. EGR. OF RECORD: GFW DATE: 04/2026

REVISIONS						SHEET NO.
NO.	BY:	DATE:	NO.	BY:	DATE:	S-09
1			3			TOTAL SHEETS
2			4			14

w:\Crutcher
DGN: pw://jmt-pw.bentley.com/jmt-pw-01/Documents/Projects/2025/25-00529/25-00529-001/Design/Structures/NC PRB-Steel Beam with Timber Deck Standards/Single Lane Steel Beam with Timber Deck Plans/2 Standard Drawings/20-70 FT - 12 FT DECK WIDTH/009-s9_End Bent_Drilled-in Piles.dgn
TIME: 7/25/2026

Docusign Envelope ID: 7DCAD729-896F-8434-8064-B80FB7A31D66

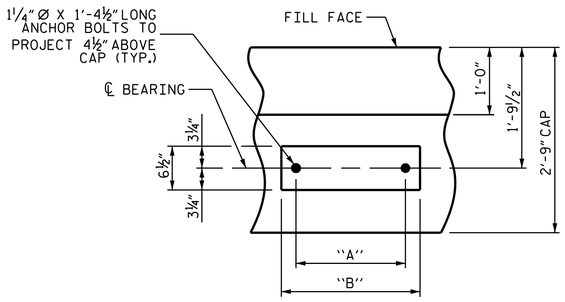

BEARING DETAIL

(TYP. EACH BEARING LOCATION)

REFER TO DIMENSIONS TABLE ON SHEET S-07 FOR DIMENSIONS A AND B.

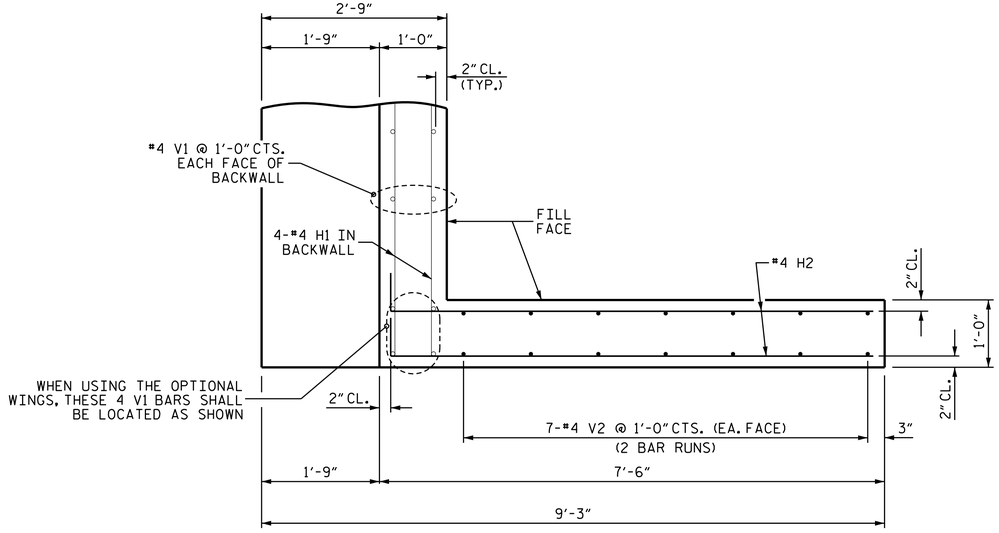

ELEVATION OF WING

(OPTIONAL)

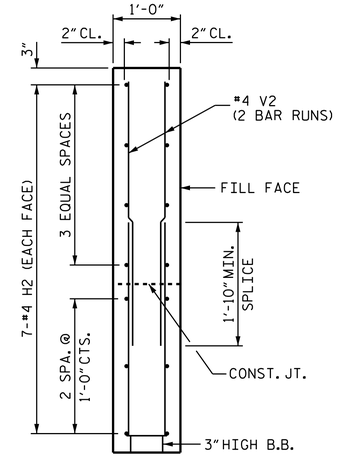

SECTION X-X

(OPTIONAL)

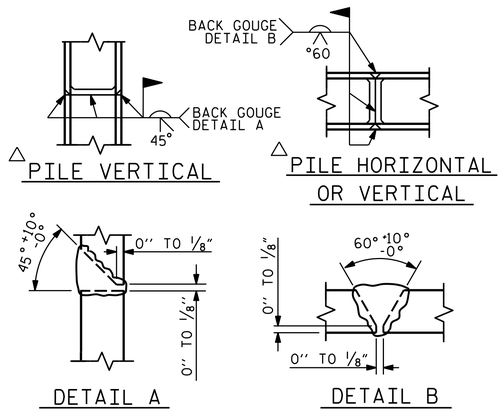

PILE SPLICE DETAILS

△ POSITION OF PILE DURING WELDING.

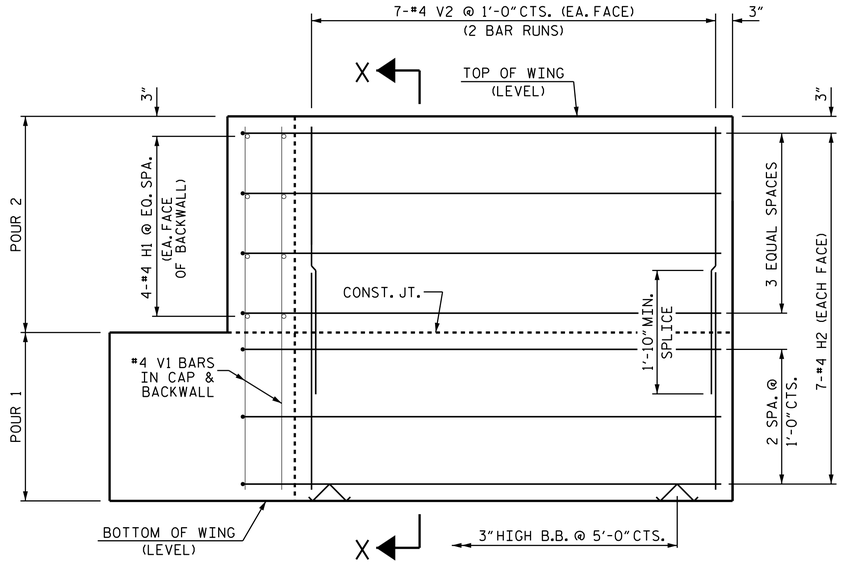

PLAN OF WING

(OPTIONAL)

RIGHT SIDE WING SHOWN, LEFT SIDE WING SIMILAR.

WING HEIGHT DEPENDENT ON BACKWALL HEIGHT.

NORTH CAROLINA PROFESSIONAL SEAL 045282 ENGINEER GWENDOLEN F. WILSON

07/27/2026

DOCUMENT NOT CONSIDERED FINAL UNLESS ALL SIGNATURES COMPLETED

SHEET 2 OF 2

NORTH CAROLINA OFFICE OF EMERGENCY MANAGEMENT

PRIVATE DRIVEWAY BRIDGE STANDARDS

SINGLE LANE STEEL BEAM BRIDGE TIMBER DECK

OPTIONAL WINGS FOR DRIVEN OR DRILLED-IN PILES

JMT Johnson, Mirmiran, & Thompson Inc.
108 Asheville Commerce Parkway
Candler, NC, 28715
License No: C-3097

DWN. BY: BC	DATE: 04/2026
CHKD. BY: GFW	DATE: 04/2026
DES. EGR. OF RECORD: GFW	DATE: 04/2026

REVISIONS						SHEET NO.
NO.	BY:	DATE:	NO.	BY:	DATE:	S-10
1			3			TOTAL SHEETS
2			4			14

wdcrutcher
DGN: pw://jmt-pw.bentley.com:jmt-pw-01/Documents/Projects/2025/25-00529/25-00529-001/Design/Structures/NC PRB-Steel Beam with Timber Deck Standards/Single Lane Steel Beam with Timber Deck Plans/2 Standard Drawings/20-70 FT - 12 FT DECK WIDTH/010-S10_Optional Wings_Piles.dgn
TIME: 7/25/2026

Docusign Envelope ID: 7DCAD729-896F-8434-8064-B80FB7A31D66

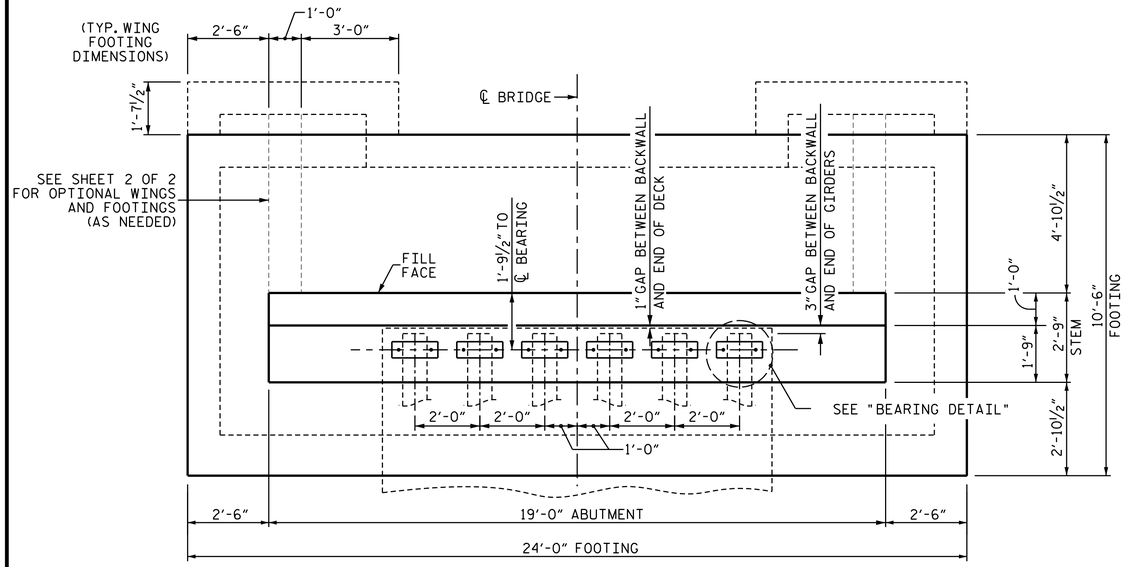

PLAN

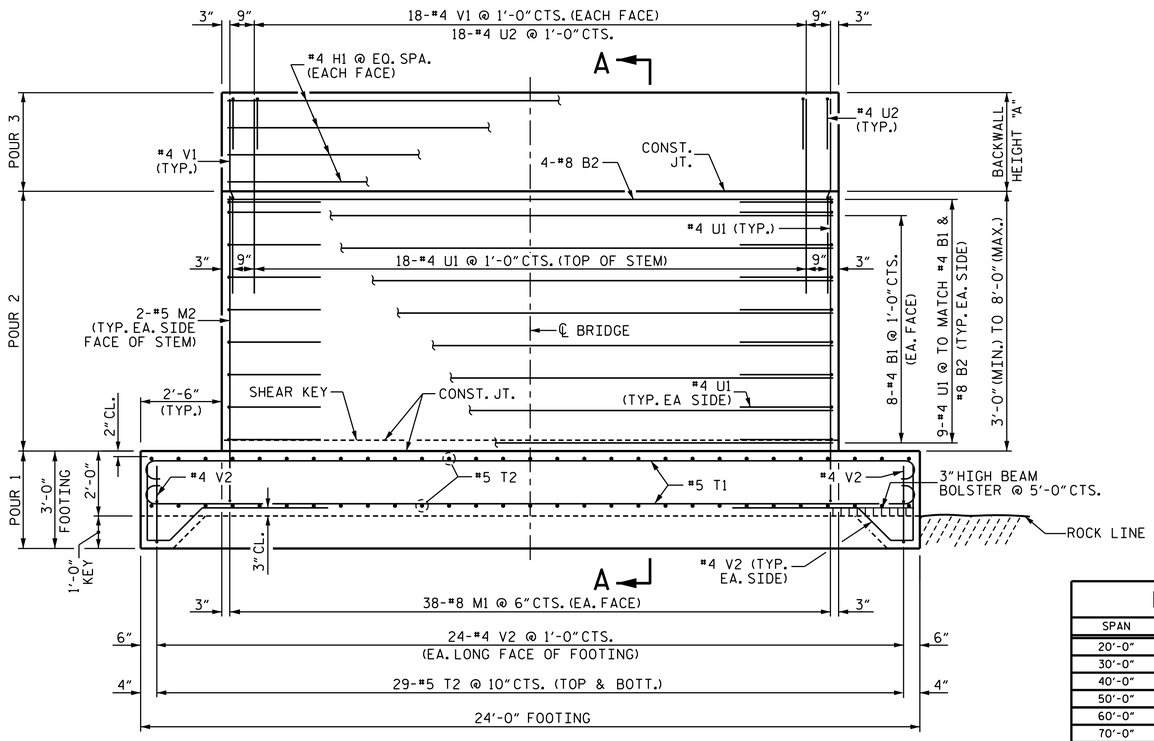

ELEVATION

(OPTIONAL WINGS NOT SHOWN FOR CLARITY)

BACKWALL HEIGHT			
SPAN	BEAM	A (2X8 DECKING)	A (4X6 DECKING)
20'-0"	W16X36	2'-2⅝"	1'-10⅞"
30'-0"	W21X48	2'-7⅜"	2'-3⅝"
40'-0"	W24X76	2'-10⅝"	2'-6⅞"
50'-0"	W24X104	2'-10¾"	2'-7"
60'-0"	W30X116	3'-4¾"	3'-1"
70'-0"	W33X130	3'-7¾"	3'-4"

DIMENSION "A" (BACKWALL HEIGHT) VARIES BASED ON DECKING TYPE. USE VALUES CORRESPONDING TO SELECTED DECKING OPTION.

BAR TYPES

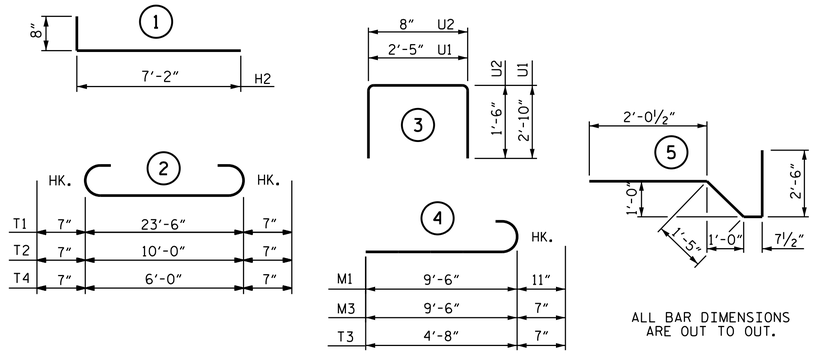

ALL BAR DIMENSIONS ARE OUT TO OUT.

GENERAL NOTES

U1 BARS IN STEM MAY BE SHIFTED AS NECESSARY TO CLEAR ANCHOR BOLTS.

CONTRACTOR SHALL SLOPE TOP OF CAP TO MATCH LONGITUDINAL GRADE OF THE BRIDGE. SLOPES SHALL MATCH ON BOTH END BENT 1 AND END BENT 2 CAPS.

WINGS MAY BE REQUIRED AT THE DIRECTION OF THE ENGINEER OR DESIGNEE.

FOR OPTIONAL WINGS FOR END BENT, SEE SHEET 2 OF 2.

FOR SECTION A-A, SEE SHEET 2 OF 2.

THE FINAL STEM WALL HEIGHT SHALL BE DETERMINED IN THE FIELD BASED ON EXISTING ROCK ELEVATIONS. THE STEM WALL HEIGHT SHALL NOT BE LESS THAN 3'-0"OR GREATER THAN 8'-0.

END BENT REINFORCEMENT AND DETAILS ARE BASED ON A MAXIMUM STEM WALL HEIGHT OF 8'-0"AND THE SHORTEST BACKWALL HEIGHT USING 2X8 DECKING. CONTRACTOR SHALL ADJUST REINFORCEMENT FOR FIELD-VERIFIED STEM WALL HEIGHTS AND BACKWALL HEIGHTS WHILE MAINTAINING BAR SIZES, SPACING, SPLICE LENGTHS, AND OVERALL CONFIGURATION SHOWN.

FOUNDATION NOTES

SPREAD FOOTING

FOUNDATION EXCAVATIONS SHALL BE ACCOMPLISHED IN ACCORDANCE WITH SECTION 410 OF THE SPECIFICATIONS.

A GEOTECHNICAL ENGINEER LICENSED IN THE STATE OF NORTH CAROLINA SHALL OBSERVE THE BEARING SURFACE AND CONFIRM THE FOOTING IS CONSTRUCTED ON ROCK. THE ENGINEER SHALL PROVIDE A LETTER VERIFYING ACCEPTANCE OF THE BEARING SURFACE.

CLEAN ALL ROCK OF LOOSE MATERIAL AND CUT TO A FIRM SURFACE, AS DIRECTED BY THE ENGINEER AND FILL WITH CONCRETE, MORTAR OR GROUT. LEAVE ROCK SURFACE IN A ROUGH CONDITION.

BEARING SURFACE MUST RESIST A MAXIMUM APPLIED BEARING PRESSURE OF 5.0 KSF.

KEY IN FOOTINGS AT LEAST 1 FT INTO ROCK.

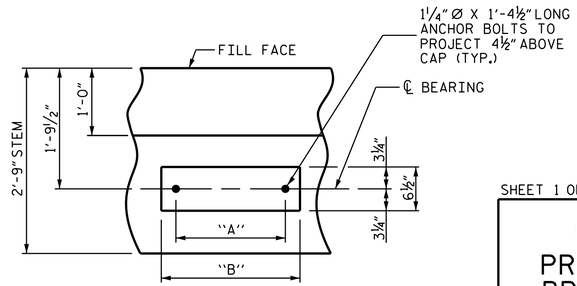

BEARING DETAIL

(TYP. EACH BEARING LOCATION)
REFER TO DIMENSIONS TABLE ON SHEET S-07 FOR DIMENSIONS A AND B.

**BILL OF MATERIAL FOR ONE END BENT

BAR	NO.	SIZE	TYPE	LENGTH	WEIGHT
B1	16	#4	STR	18'-8"	200
B2	4	#8	STR	18'-8"	199
H1	8	#4	STR	18'-8"	100
M1	76	#8	4	10'-5"	2,114
M2	4	#5	STR	7'-6"	31
T1	26	#5	2	24'-8"	669
T2	58	#5	2	11'-2"	676
U1	38	#4	3	8'-1"	205
U2	20	#4	3	3'-8"	49
V1	40	#4	STR	6'-0"	160
V2	70	#4	5	6'-7"	308
H2	52	#4	1	7'-10"	272
M3	40	#5	4	10'-1"	421
M4	40	#5	STR	5'-4"	223
T3	32	#5	4	5'-3"	175
T4	8	#5	2	7'-2"	60
V2	22	#4	5	6'-7"	97

ADDITIONAL BARS FOR 2 OPTIONAL WINGS WITH FOOTINGS

REINFORCING STEEL (W/O WINGS)	4711 LBS.
REINFORCING STEEL (WITH WINGS)	5959 LBS.

CLASS A CONCRETE BREAKDOWN	
POUR #1 FOOTING	22.5 C.Y.
POUR #2 END BENT STEM	15.5 C.Y.
POUR #3 BACKWALL	1.6 C.Y.
WINGWALLS (OPTIONAL)	7.5 C.Y.
TOTAL CLASS A CONCRETE (W/O WINGS)	39.6 C.Y.
TOTAL CLASS A CONCRETE (WITH WINGS)	47.1 CY

**THE CONTRACTOR'S ATTENTION IS CALLED TO THE FACT THAT THE QUANTITIES AND REINFORCING BARS SHOWN IN THE BILL OF MATERIAL ARE BASED ON AN 8'-0" MAXIMUM STEM WALL HEIGHT AND THE SHORTEST BACKWALL HEIGHT USING 2X8 DECKING. THE CONTRACTOR IS RESPONSIBLE FOR THE FINAL QUANTITIES BASED ON THE ACTUAL STEM WALL AND BACKWALL HEIGHTS.

Docusigned by: Gene W. Nodlen F., PE
NORTH CAROLINA PROFESSIONAL SEAL 045282 ENGINEER GENE W. NODLEN F. WILSON
07/27/2026

DOCUMENT NOT CONSIDERED FINAL UNLESS ALL SIGNATURES COMPLETED

SHEET 1 OF 2

NORTH CAROLINA OFFICE OF
EMERGENCY MANAGEMENT

PRIVATE DRIVEWAY BRIDGE STANDARDS

SINGLE LANE STEEL BEAM BRIDGE
TIMBER DECK

END BENT

SPREAD FOOTING

Johnson, Mirmiran, & Thompson Inc.
108 Asheville Commerce Parkway
Candler, NC, 28715
License No: C-3097

DWN. BY: BC DATE: 04/2026
CHKD. BY: GFW DATE: 04/2026
DES. EGR. OF RECORD: GFW DATE: 04/2026

REVISIONS						SHEET NO.
NO.	BY:	DATE:	NO.	BY:	DATE:	S-11
1			3			TOTAL SHEETS
2			4			14

wdcrdcter
DSN: pw:// jmt-pw.bentley.com/jmt_pw_01/Documents/Projects/2025/25-00529/25-00529-001/Design/Structures/NC PRB-Steel Beam with Timber Deck Standards/Single Lane Steel Beam with Timber Deck Plans/2 Standard Drawings/20-70 FT - 12 FT DECK WIDTH/01-SII_End Bent_Spread Footing
TIME: 7:25:1 2026

Docusign Envelope ID: 7DCAD729-896F-8434-8064-B80FB7A31D66

w:\structures_dgn\Timber Deck Plans\2 Standard Drawings\20-70 FT - 12 FT DECK WIDTH\012-512_Optional Wings_Footings.dgn
w:\structures_dgn\Timber Deck Plans\2 Standard Drawings\20-70 FT - 12 FT DECK WIDTH\012-512_Optional Wings_Footings.dgn
DGN: pw:// jmt-pw.bentley.com:jmt-pw-01\Documents\Projects\2025\25-00529\25-00529-001\Design\Structures\NC FRB-Steel Beam with Timber Deck Standards\Single Lane Steel Beam with Timber Deck Plans\2 Standard Drawings\20-70 FT - 12 FT DECK WIDTH\012-512_Optional Wings_Footings.dgn
USER: wdcrutcher
TIME: 7:25 AM
DATE: 7/25/2026

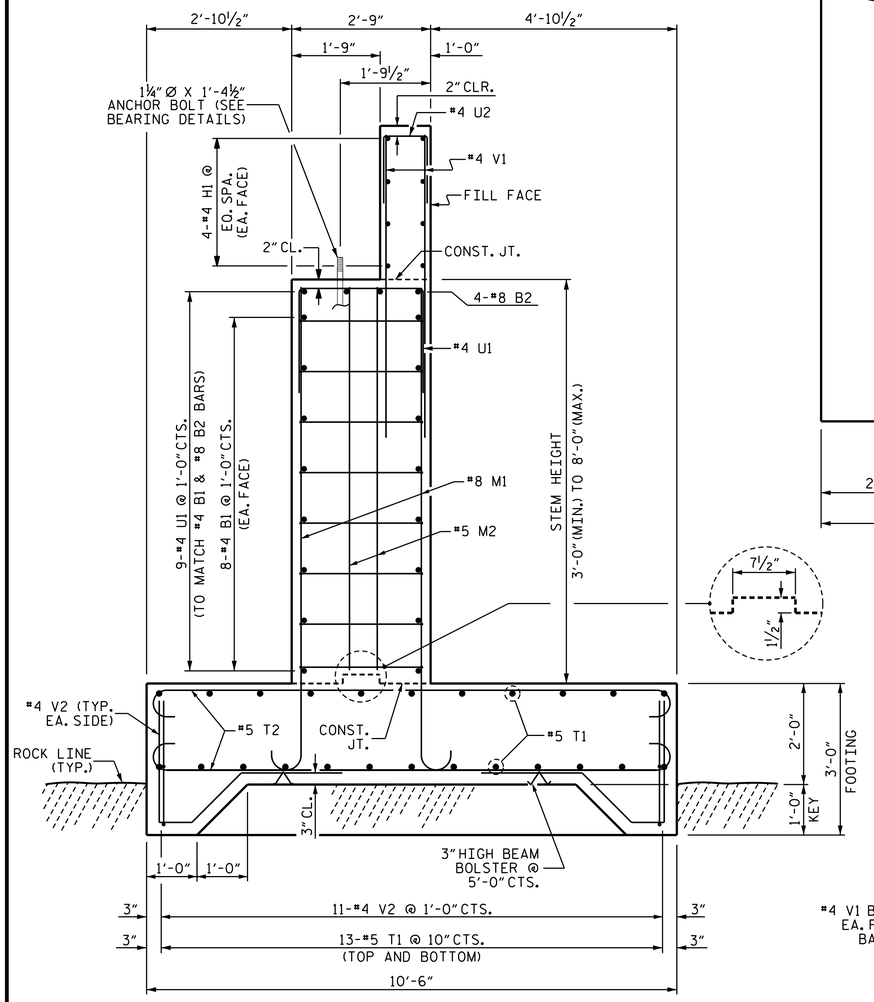

SECTION A-A

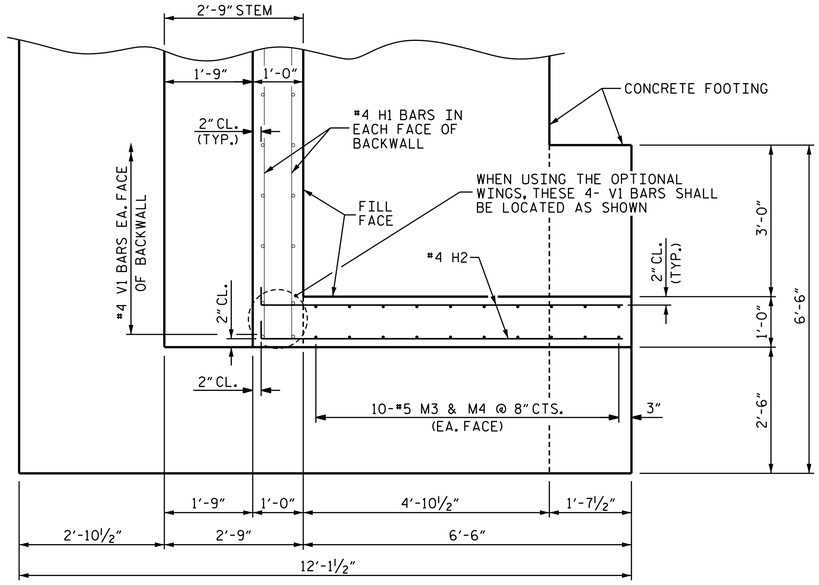

PLAN OF WING
(OPTIONAL)

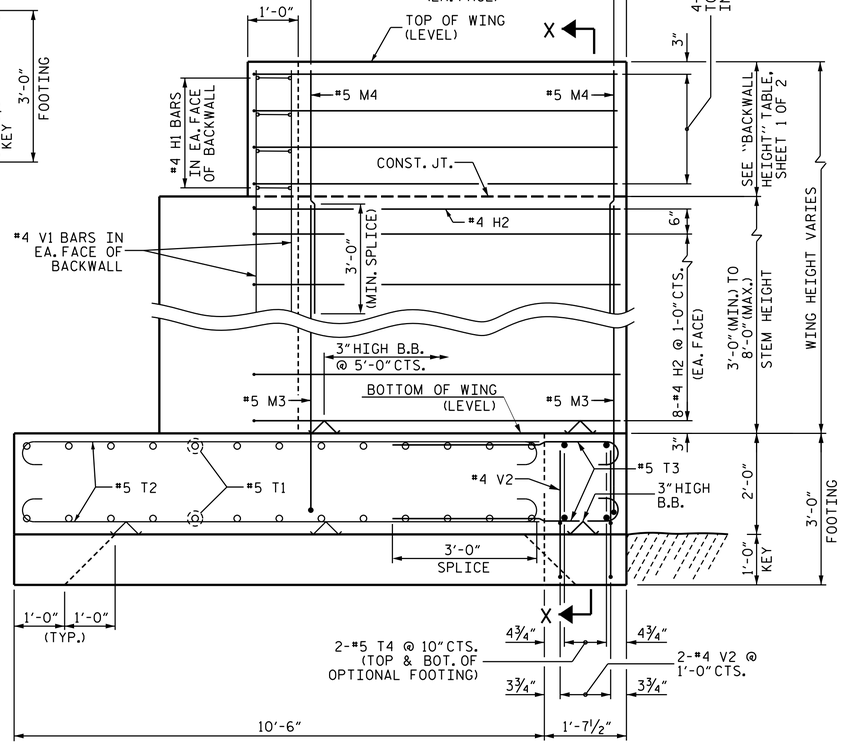

ELEVATION OF WING
(OPTIONAL)

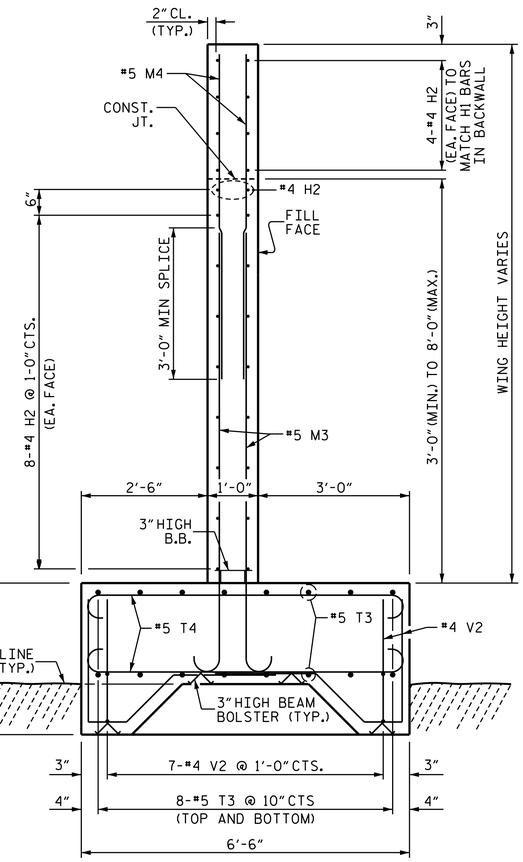

SECTION X-X
(OPTIONAL)

DocuSigned by:
NORTH CAROLINA PROFESSIONAL SEAL 045282 ENGINEER GWENDOLEN F. WILSON
172D0E2E4E2E4B8...
07/27/2026

DOCUMENT NOT CONSIDERED FINAL UNLESS ALL SIGNATURES COMPLETED

SHEET 2 OF 2

NORTH CAROLINA OFFICE OF
EMERGENCY MANAGEMENT

PRIVATE DRIVEWAY BRIDGE STANDARDS

SINGLE LANE STEEL BEAM BRIDGE
TIMBER DECK

OPTIONAL WINGS & FOOTINGS

JMT Johnson, Mirmiran, & Thompson Inc.
108 Asheville Commerce Parkway
Candler, NC. 28715
License No: C-3097

DWN. BY: BC DATE: 04/2026
CHKD. BY: GFW DATE: 04/2026
DES. EGR. OF RECORD: GFW DATE: 04/2026

REVISIONS						SHEET NO.
NO.	BY:	DATE:	NO.	BY:	DATE:	S-12
1			3			TOTAL SHEETS
2			4			14

Docusign Envelope ID: 7DCAD729-896F-8434-8064-B80FB7A31D66

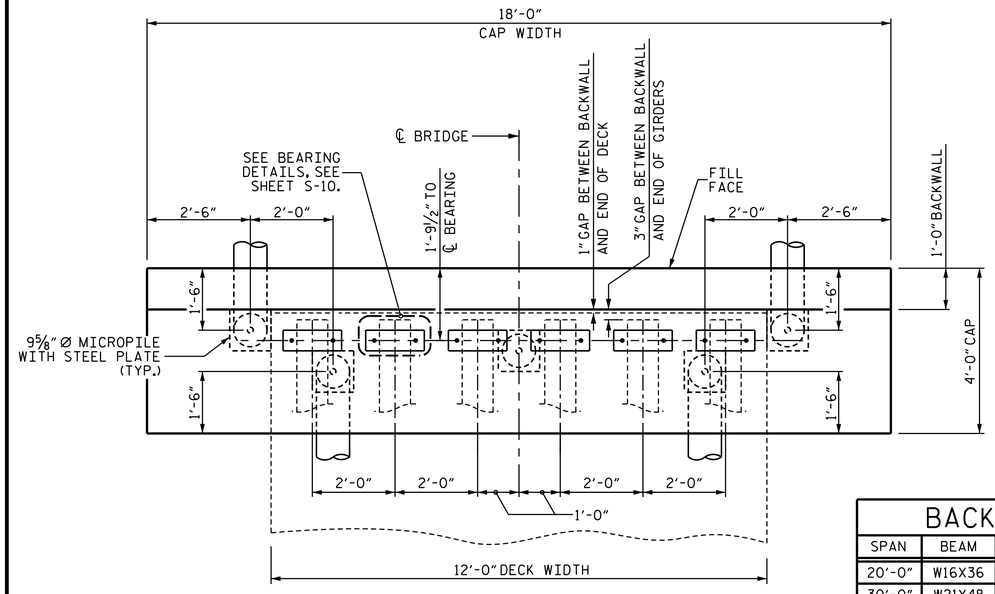

PLAN

BACKWALL HEIGHT			
SPAN	BEAM	A (2X8 DECKING)	A (4X6 DECKING)
20'-0"	W16X36	2'-2⅝"	1'-10⅞"
30'-0"	W21X48	2'-7⅜"	2'-3⅝"
40'-0"	W24X76	2'-10⅝"	2'-6⅞"
50'-0"	W24X104	2'-10¾"	2'-7"
60'-0"	W30X116	3'-4¾"	3'-1"
70'-0"	W33X130	3'-7¾"	3'-4"

DIMENSION "A" (BACKWALL HEIGHT) VARIES BASED ON DECKING TYPE. USE VALUES CORRESPONDING TO SELECTED DECKING OPTION.

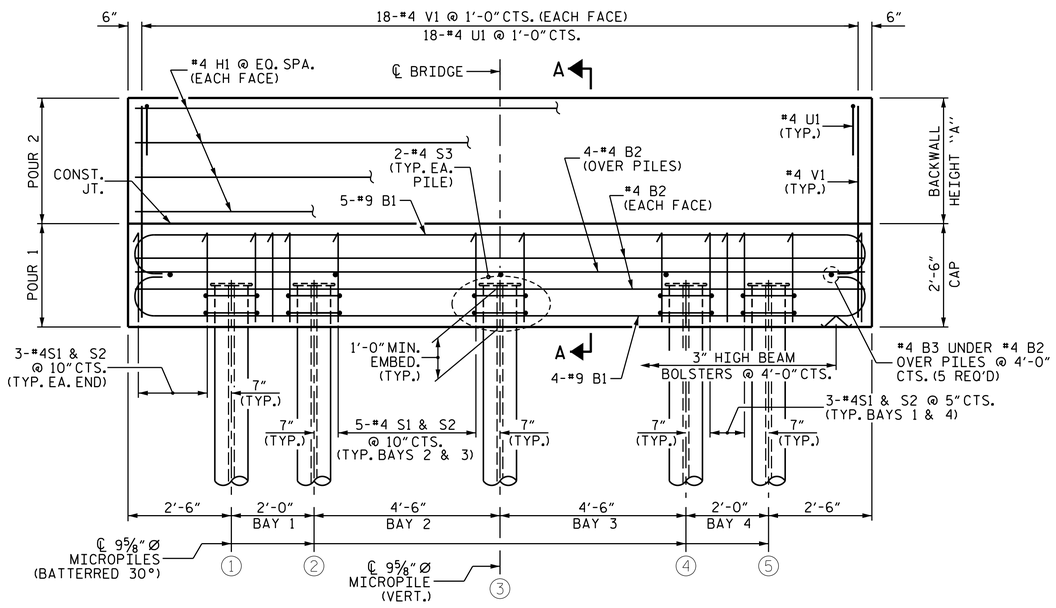

ELEVATION

GENERAL NOTES

STIRRUPS IN CAP MAY BE SHIFTED AS NECESSARY TO CLEAR ANCHOR BOLTS.

CONTRACTOR SHALL SLOPE TOP OF CAP TO MATCH LONGITUDINAL GRADE OF THE BRIDGE. SLOPES SHALL MATCH ON BOTH END BENT 1 AND END BENT 2 CAPS.

FOR BEARING DETAILS, SEE SHEET S-10.

"V" BARS BASED ON SHORTEST BACKWALL HEIGHT USING 2X8 DECKING. ADJUST LENGTH TO MAINTAIN REQUIRED MIN. CLEARANCE AT BOTTOM OF CAP AND TOP OF BACKWALL.

REFER TO MICROPILE DRAWINGS FOR MICROPILE REQUIREMENTS, PROPERTIES AND OTHER DETAILS.

FOUNDATION NOTES

MICROPILES

FOR MICROPILES, SEE SPECIAL PROVISIONS.

BAR TYPES

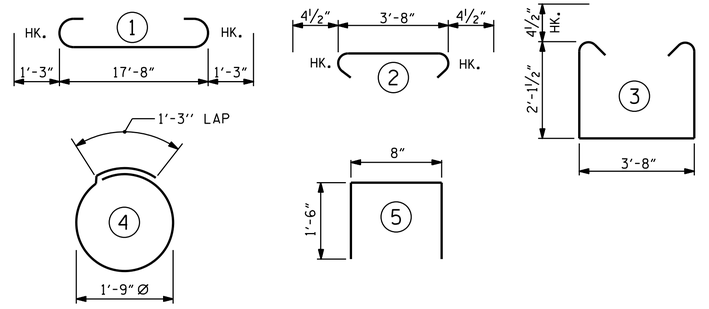

ALL BAR DIMENSIONS ARE OUT TO OUT.

BILL OF MATERIAL
FOR ONE END BENT

BAR	NO.	SIZE	TYPE	LENGTH	WEIGHT
B1	9	#9	1	20'-2"	617
B2	8	#4	STR	17'-8"	94
B3	5	#4	STR	3'-8"	12
H1	8	#4	STR	17'-8"	94
U1	18	#4	5	3'-8"	44
S1	22	#4	3	8'-8"	127
S2	22	#4	2	4'-5"	65
S3	10	#4	4	6'-9"	45
V1	36	#4	STR	4'-4"	104

REINFORCING STEEL (FOR ONE END BENT) ✱ 1,202 LBS.

CLASS A CONCRETE (FOR ONE END BENT)

POUR 1	6.7 C.Y.
POUR 2	✱ 1.5 C.Y.
TOTAL	8.2 C.Y.

✱ REINFORCING AND CONCRETE QUANTITIES ARE BASED ON THE SHORTEST BACKWALL HEIGHT USING 2X8 DECKING. CONTRACTOR SHALL ADJUST FOR 4X6 DECKING OR INCREASED BACKWALL HEIGHT.

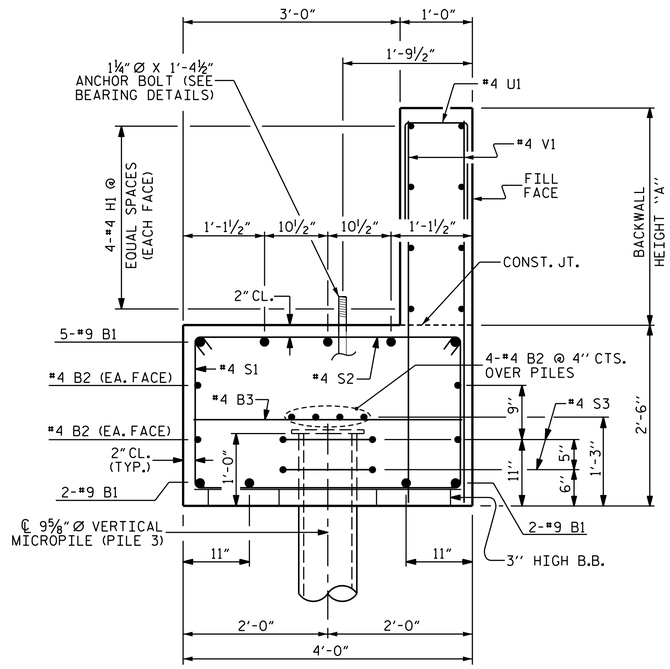

SECTION A-A

(PILES 1, 2, 4 & 5 ARE BATTERED 30° AND NOT SHOWN FOR CLARITY)



DOCUMENT NOT CONSIDERED FINAL UNLESS ALL SIGNATURES COMPLETED

NORTH CAROLINA OFFICE OF
EMERGENCY MANAGEMENT

PRIVATE DRIVEWAY BRIDGE STANDARDS

SINGLE LANE STEEL BEAM BRIDGE
TIMBER DECK

END BENT
MICROPILES

Johnson, Mirmiran, & Thompson Inc.
108 Asheville Commerce Parkway
Candler, NC. 28715
License No: C-3097

DWN. BY: WDC DATE: 06/2026
CHKD. BY: GFW DATE: 06/2026
DES. EGR. OF RECORD: GFW DATE: 06/2026

REVISIONS					
NO.	BY:	DATE:	NO.	BY:	DATE:
1			3		
2			4		

SHEET NO. S-13
TOTAL SHEETS 14

w:\structur
DGN: pw:\\jmt-pw.bentley.com:jmt-pw-01\Documents\Projects\2025\25-00529\25-00529-001\Design\Structures\NC PRB-Steel Beam with Timber Deck Standards\Single Lane Steel Beam with Timber Deck Plans\2 Standard Drawings\20-70 FT - 12 FT DECK WIDTH\013-S13_End Bent_Micropiles.dgn
TIME: 7:25:2026

Docusign Envelope ID: 7DCAD729-896F-8434-8064-B80FB7A31D66

STRUCTURAL STEEL / HARDWARE NOTES:

ALL STRUCTURAL STEEL SHALL BE AASHTO M270 GRADE 50 AND PAINTED IN ACCORDANCE WITH SYSTEM 1 OR GALVANIZED IN ACCORDANCE WITH THE STRUCTURAL STEEL COATINGS PROGRAM AND ARTICLE 442-8 OF THE STANDARD SPECIFICATIONS UNLESS OTHERWISE NOTED ON THE PLANS.

COATING APPLICATION FOR ALL STRUCTURAL STEEL SHALL NOT BE PERFORMED UNTIL SHOP FABRICATION INCLUDING CUTTING, DRILLING AND WELDING HAS BEEN COMPLETED.

ALL HARDWARE SHALL BE GALVANIZED IN ACCORDANCE WITH SECTION 1076 OF THE STANDARD SPECIFICATION, UNLESS OTHERWISE NOTED ON THE PLANS.

DO NOT DRIVE LAG/STRUCTURAL SCREWS WITH A HAMMER, SCREW OR TORQUE LAG/STRUCTURAL SCREWS.

SCREWS SHALL BE OF SUFFICIENT LENGTH TO PROVIDE FULL THREAD ENGAGEMENT INTO RECEIVING MEMBERS.

REPAIR ANY DAMAGED GALVANIZED SURFACES IN ACCORDANCE WITH STANDARD SPECIFICATION ARTICLE 1076-7.

REPAIR ANY DAMAGED PAINTED SURFACES IN ACCORDANCE WITH SECTION 442 OF THE STANDARD SPECIFICATIONS.

STRUCTURAL WOOD SCREWS SHALL BE HOT-DIP GALVANIZED IN ACCORDANCE WITH SECTION 1076 OF THE STANDARD SPECIFICATION.

TIMBER / LUMBER NOTES:

ALL TIMBER AND LUMBER MEMBERS SHALL BE TREATED NO. 1 SOUTHERN PINE AND CONFORM TO SECTION 1082 OF THE STANDARD SPECIFICATIONS.

ALL TIMBER DIMENSIONS SHOWN ON THE PLANS ARE NOMINAL DIMENSIONS. DESIGN IS BASED ON ACTUAL DRESSED DIMENSIONS.

PRE-DRILL HOLES IN TIMBER MEMBERS RECEIVING BOLTS TO ELIMINATE SPLITTING. PRE-DRILL HOLES FOR SCREWS AS NECESSARY TO PREVENT SPLITTING IN TIMBER MEMBERS.

DESIGN LOADS:

LIVE LOAD:

TRUCK LOAD:

THIS BRIDGE WAS DESIGNED FOR:

HS20
GVWR = 72,000 LBS
NUMBER OF AXLES: 3
AXLE WEIGHTS:
GAWR FRONT = 8,000 LBS
GAWR INTERMEDIATE = 32,000 LBS
GAWR REAR = 32,000 LBS

EV2
GVWR = 57,500 LBS
NUMBER OF AXLES: 2
AXLE WEIGHTS:
GAWR FRONT = 24,000 LBS
GAWR REAR = 33,500 LBS

EV3
GVWR = 86,000 LBS
NUMBER OF AXLES: 3
AXLE WEIGHTS:
GAWR FRONT = 24,000 LBS
GAWR INTERMEDIATE = 31,000 LBS
GAWR REAR = 31,000 LBS

LIVE LOAD FACTORS:

HS-20 = 1.30
EV2 = 1.3
EV3 = 1.3

LIVE LOAD FACTORS LOAD RATING:

HS-20 = 1.35
EV2 = 1.0
EV3 = 1.0

MULTIPLE PRESENCE FACTOR:

MPF = 1.0

LANE LOAD:

NO LANE LOAD WAS APPLIED.

IMPACT:

DYNAMIC IMPACT FOR WOOD/TIMBER COMPONENTS IS ZERO. DYNAMIC IMPACT FACTOR FOR ALL OTHER COMPONENTS IS 33%.

DEAD LOADS:

WEARING SURFACES SHALL NOT BE ALLOWED.

WEIGHT OF TIMBER = 40 PCF.

DESIGN ASSUMPTIONS/PARAMETERS:

SUPERSTRUCTURE WILL BE SIX LINES OF I-BEAMS.

BRIDGE IS SINGLE SPAN.

BRIDGE WIDTH = 12'-0" OUT TO OUT.

REF.#	DESIGN VEHICLES SCHEMATIC
HS-20	8K, 32K, 32K; 14', 14', 28'; 72K 36 TON
EV2	24K, 33.5K; 15'; 57.5K 28.75 TON
EV3	24K, 31K, 31K; 15', 4', 19'; 86K 43 TONS

GENERAL NOTES:

THIS BRIDGE IS DESIGNED IN ACCORDANCE WITH THE NORTH CAROLINA DEPARTMENT OF TRANSPORTATION (NCDOT) "STRUCTURES MANAGEMENT UNIT MANUAL", DATED 6/15/23, 2024 NCDOT IN-KIND TIMBER BRIDGE REPLACEMENT PROGRAM, AND THE AASHTO "LRFD BRIDGE DESIGN SPECIFICATIONS", 9th EDITION.

THESE DRAWINGS ARE INTENDED ONLY FOR USAGE IN THE INSTALLATION OF SINGLE SPAN I-BEAM BRIDGES FOR PRIVATE DRIVEWAYS IN COUNTIES AS LISTED IN THE CONTRACT DOCUMENTS BY NORTH CAROLINA OFFICE OF EMERGENCY MANAGEMENT IN RESPONSE TO THE DAMAGE CAUSED BY HURRICANE HELENE.

BRIDGE CONSTRUCTION, WORKMANSHIP, AND MATERIALS SHALL BE IN ACCORDANCE WITH THE NCDOT "STANDARD SPECIFICATIONS FOR ROADS AND STRUCTURES", 2024 EDITION.

THIS BRIDGE IS LOCATED IN SEISMIC ZONE 1.

IT IS ASSUMED THAT THERE ARE NO UTILITY CONFLICTS. THE CONTRACTOR SHALL INVESTIGATE THE PRESENCE OF UTILITIES BEFORE COMMENCING WORK.

FOR SUBMITTAL OF WORKING DRAWINGS, SEE SPECIAL PROVISIONS.

FOR FALSEWORK AND FORMWORK, SEE SPECIAL PROVISIONS.

FOR CRANE SAFETY, SEE SPECIAL PROVISIONS.

FOR GROUT FOR STRUCTURES, SEE SPECIAL PROVISIONS.

FOR ASBESTOS ASSESSMENT, SEE SPECIAL PROVISIONS.

ALL DIMENSIONS SHOWN ARE HORIZONTAL OR VERTICAL, UNLESS OTHERWISE NOTED.

CONTRACTOR SHALL SET BRIDGE ELEVATIONS SUCH THAT WATER WILL DRAIN AND NOT POND ON THE BRIDGE DECK AND MINIMUM LONGITUDINAL GRADE SHALL BE 0.5% AND MAXIMUM GRADE SHALL BE 6%.

FOR PILE-SUPPORTED END BENTS, PLACE APPROACH EMBANKMENT (CORE MATERIAL) PRIOR TO PILE INSTALLATION.

THIS BRIDGE HAS BEEN DESIGNED FOR ADTT < 100.

EROSION AND SEDIMENT CONTROL MEASURES SHOWN ON SHEET EC-01 ARE FOR GENERAL GUIDANCE ONLY AND REPRESENT MINIMUM REQUIREMENTS. THE CONTRACTOR SHALL PROVIDE, INSTALL, AND MAINTAIN ALL REQUIRED EROSION AND SEDIMENT CONTROL MEASURES IN ACCORDANCE WITH THE STANDARD SPECIFICATIONS, CONTRACT DOCUMENTS, AND APPLICABLE REGULATIONS. THE CONTRACTOR SHALL BE RESPONSIBLE FOR MODIFYING THESE MEASURES AND PROVIDING ANY ADDITIONAL DEVICES NECESSARY TO ACCOUNT FOR ACTUAL SITE CONDITIONS, INCLUDING GROUNDWATER CONDITIONS AND WEATHER EVENTS, AND TO PREVENT SEDIMENT FROM LEAVING THE PROJECT SITE.

ALL REFERENCES WITHIN THESE PLANS TO "STANDARD SPECIFICATIONS" OR "NCDOT SPECIFICATIONS" SHALL BE GOVERNED BY THE NCDOT "STANDARD SPECIFICATIONS FOR ROADS AND STRUCTURES" DATED JANUARY 2024.

TRAFFIC CONTROL SHALL BE PROVIDED IN ACCORDANCE WITH THE CONTRACT DOCUMENTS, INCLUDING THE SPECIAL PROVISIONS, AND IN CONFORMANCE WITH THE NCDOT STANDARD SPECIFICATIONS, NCDOT ROADWAY STANDARD DRAWINGS, AND THE MANUAL ON UNIFORM TRAFFIC CONTROL DEVICES (MUTCD). THE CONTRACTOR SHALL BE RESPONSIBLE FOR PROVIDING, INSTALLING, AND MAINTAINING ALL TRAFFIC CONTROL DEVICES NECESSARY TO SAFELY CONDUCT THE WORK AND PROTECT THE TRAVELING PUBLIC.

MATERIAL PROPERTIES:

CONCRETE: MINIMUM COMPRESSIVE STRENGTH, f'c = 3,000 psi (CLASS A)

STRUCTURAL STEEL: AASHTO M270, GRADE 50.

WELDS: SMAW, 70 KSI ELECTRODES PER NCDOT STANDARD SPECIFICATIONS.

ANCHOR BOLTS: ASTM F1554, GRADE 55.

BOLTS SHALL CONFORM TO ASTM F3125, GRADE A325. PROVIDE GALVANIZED NUTS AND WASHERS COMPATIBLE WITH THE BOLTS.

TIMBER: ALL TIMBER & DIMENSIONAL LUMBER SHALL BE NO. 1 VISUALLY GRADED, SOUTHERN PINE WITH REFERENCE DESIGN VALUES OF: Fbo = 1.35 ksi AND Fvo = 0.175 ksi OR GREATER.

ELASTOMER IN ALL BEARINGS SHALL BE 50 DUROMETER HARDNESS WITH A SHEAR MODULUS OF 0.110 KSI.

Docusigned by: Gwen Wilson
NORTH CAROLINA PROFESSIONAL SEAL 045282 ENGINEER GWENDOLEN F. WILSON
07/27/2026

DOCUMENT NOT CONSIDERED FINAL UNLESS ALL SIGNATURES COMPLETED

NORTH CAROLINA OFFICE OF
EMERGENCY MANAGEMENT

PRIVATE DRIVEWAY BRIDGE STANDARDS

SINGLE LANE STEEL BEAM BRIDGE
TIMBER DECK

GENERAL NOTES

Johnson, Mirmiran, & Thompson Inc.
108 Asheville Commerce Parkway
Candler, NC, 28715
License No: C-3097

DWN. BY: BC DATE: 04/2026
CHKD. BY: GFW DATE: 04/2026
DES. EGR. OF RECORD: GFW DATE: 04/2026

REVISIONS						SHEET NO.
NO.	BY:	DATE:	NO.	BY:	DATE:	S-14
1			3			TOTAL SHEETS
2			4			14

w:\civil\cad\dgn_jmt-pw.dgn
DGN: pw:/jmt-pw.bentley.com/jmt-pw-01/Documents/Projects/2025/25-00529/25-00529-001/Design/Structures/NC PRB-Steel Beam with Timber Deck Standards/Single Lane Steel Beam with Timber Deck Plans/2 Standard Drawings/20-70 FT - 12 FT DECK WIDTH/014-S14_General Notes.dgn
USER: rfrye
TIME: 7/25/2026

{¢5кah5¦[!w .wL5D9

Site # ллрπлмπфŎмоō олф ¢dzŎ⌊ŜŃ wŘ over [ƛǘǘfŜ l ƻŃǎŜ Creek in !ǎƘŜ County

Docusign Envelope ID: A4C85892-DFF7-88C3-8168-668253DB637A

11/14/23

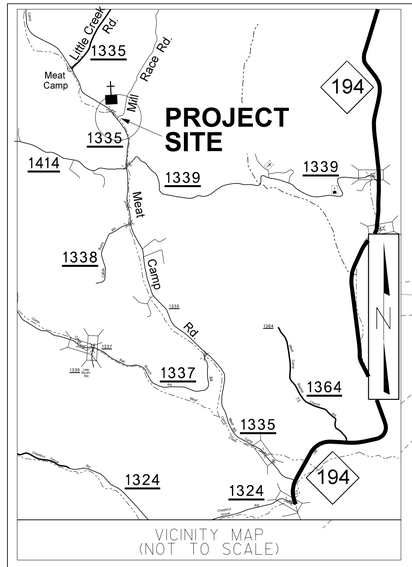

CUR DATA -DET-
PIc 10+28.94
Δc = 46°05'51.4" (LT)
D = 114°35'29.6"
Lc = 40.23
Tc = 21.27
R = 50
SE = EXIST

Parcel ID: 2913366708000
TRACY M. CRITCHER et ux
DEED BOOK 2370, PAGE 700

Parcel ID: 2913275126000
WILLIAM MILES WACASTER
DEED BOOK 1013, PAGE 212

Parcel ID: 2913274124000
MARICELA VERONICA SANDOVAL and
FOREST WALKER VAN HOOSE
DEED BOOK 2381, PAGE 43

Parcel ID: 2913270851000
KAY P. WOOD
DEED BOOK 2370, PAGE 681

Parcel ID: 2913169507000
HARVEY MICHAEL TRIVETTE et ux
DEED BOOK 1768, PAGE 526

BEGIN BRIDGE
-L- POT 11+23.21

-L- PT 11+03.30
BRG AH S34°09'31.8"W

END BRIDGE
-L- POT 11+61.47

-L- POE 11+80.81

-Y- PT 10+90.32

END CONSTRUCTION
-L- POT 11+71.00
-Y- STA. 11+01.70, 10' RT

-Y- POE 11+51.93

CLASS II RIP RAP
(2'-0" THICK TYP.)
STR. PAY ITEM

DO NOT DISTURB TREE

-L- POB 10+00.00
-DET- STA. 10+00.00
BRG AH S79°23'24.2"W

-L- PC 10+62.33

BEGIN CONSTRUCTION
-L- POC 11+00.00

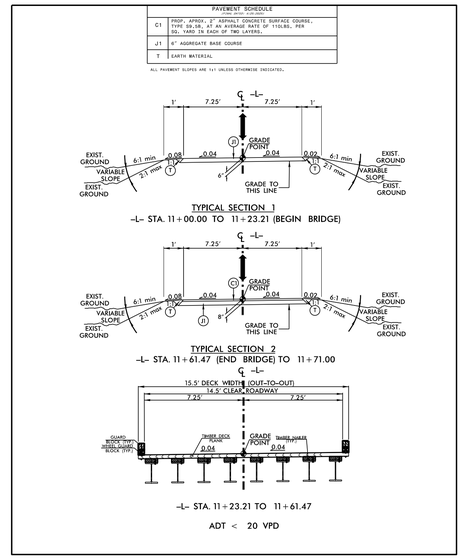

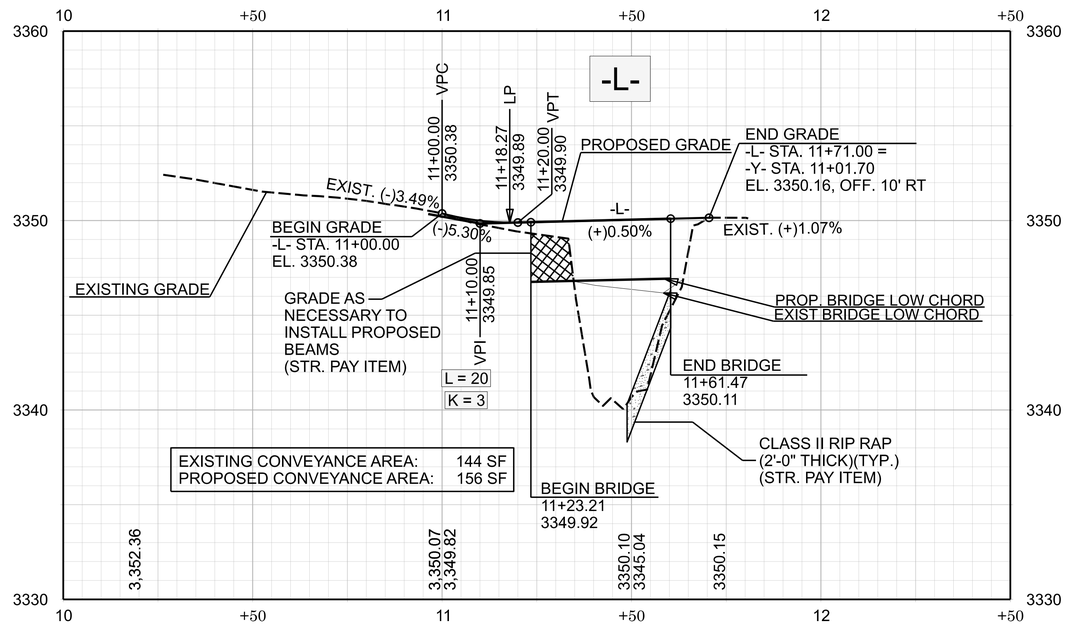

NCEM GROW
095-01 | 86E4F

NORTH CAROLINA
DEPARTMENT OF TRANSPORTATION
WATAUGA COUNTY

ROADWAY DESIGN UNIT

ROADWAY DESIGN ENGINEER
NORTH CAROLINA PROFESSIONAL SEAL 057348 ENGINEER SARA S. LOWRIE
Signed by: Sara Lowrie
10/16/2026
DOCUMENT NOT CONSIDERED FINAL UNLESS ALL SIGNATURES COMPLETED

HYDRAULICS ENGINEER
NORTH CAROLINA PROFESSIONAL SEAL 051699 ENGINEER TIFFANY A. PREDDY
Signed by:
10/19/2026

PREPARED BY
STV Engineers, Inc.
2151 Hawkins Street, Suite 1400
Charlotte, NC 28203
NC License Number F-0991

REVISIONS

GRAPHIC SCALES
20 10 0 20 40
PLANS
20 10 0 20 40
PROFILE (HORIZONTAL)
10 5 0 10 20
PROFILE (VERTICAL)

Docusign Envelope ID: A4C85892-DFF7-88C3-8168-668253DB637A

11/14/23

DETOUR PLAN

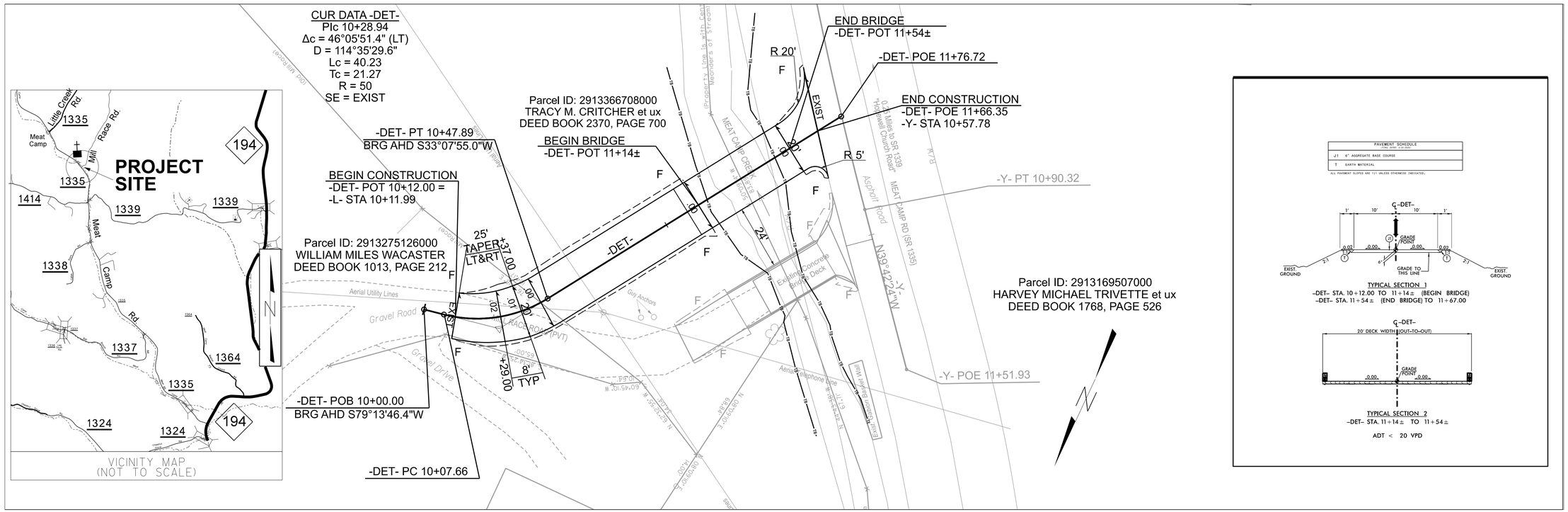

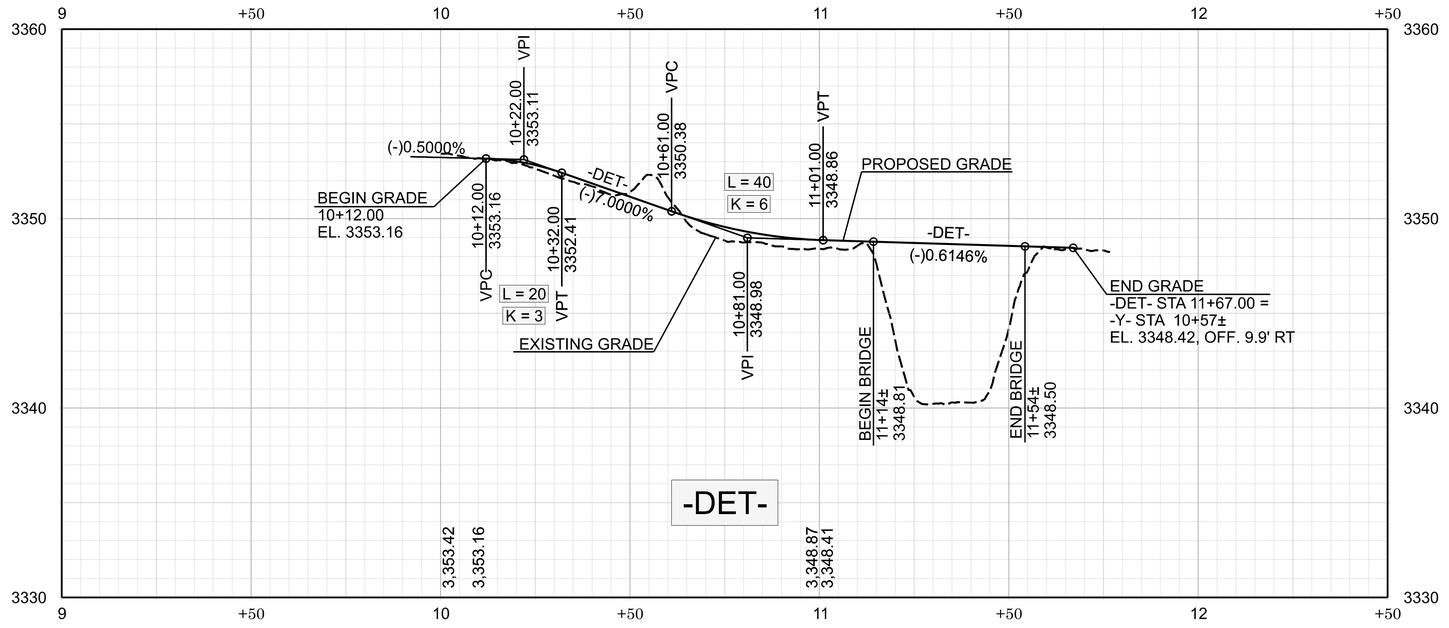

NCEM GROW
095-01 86E4F

NORTH CAROLINA
DEPARTMENT OF TRANSPORTATION
WATAUGA COUNTY

ROADWAY DESIGN UNIT

ROADWAY DESIGN ENGINEER
NORTH CAROLINA PROFESSIONAL SEAL 057348 ENGINEER SARA S. LOWRY
Signed by:
10/16/2026
DOCUMENT NOT CONSIDERED FINAL UNLESS ALL SIGNATURES COMPLETED

HYDRAULICS ENGINEER
NORTH CAROLINA PROFESSIONAL SEAL 051699 ENGINEER TIFFANY A. PREDDY
Signed by:
10/19/2026

PREPARED BY
STV Engineers, Inc.
2151 Hawkins Street, Suite 1400
Charlotte, NC 28203
NC License Number F-0991

REVISIONS

GRAPHIC SCALES
20 10 0 20 40
PLANS
20 10 0 20 40
PROFILE (HORIZONTAL)
10 5 0 10 20
PROFILE (VERTICAL)

Docusign Envelope ID: A4C85892-DFF7-88C3-8168-668253DB637A

ROADWAY STANDARD DRAWINGS

N.C. DEPARTMENT OF TRANSPORTATION - RALEIGH, N.C., DATED J ANUARY 2024
ARE APPLICABLE TO THIS PROJECT AND BY REFERENCE HEREBY ARE CONSIDERED
A PART OF THESE PLANS:
THE FOLLOWING ROADWAY STANDARDS AS SHOWN IN "ROADWAY STANDARD DRAWINGS" -

STD. NO.	TITLE
1101.01	WORK ZONE ADVANCE WARNING SIGNS
1101.02	TEMPORARY LANE CLOSURES
1101.04	TEMPORARY SHOULDER CLOSURES
1101.05	WORK ZONE VEHICLE ACCESSES
1101.11	TRAFFIC CONTROL DESIGN TABLES
1110.01	STATIONARY WORK ZONE SIGNS
1110.02	PORTABLE WORK ZONE SIGNS
1130.01	DRUM
1135.01	CONES
1145.01	BARRICADES
1150.01	FLAGGING DEVICES
1170.01	POSITIVE PROTECTION
1180.01	SKINNY-DRUM
1205.01	PAVEMENT MARKINGS - LINE TYPES AND OFFSETS

GENERAL NOTES

CHANGES MAY BE REQUIRED WHEN PHYSICAL DIMENSIONS IN THE DETAIL DRAWINGS, STANDARD DETAILS, AND ROADWAY DETAILS ARE NOT ATTAINABLE TO MEET FIELD CONDITIONS OR RESULT IN DUPLICATE OR UNDESIRED OVERLAPPING OF DEVICES. MODIFICATION MAY INCLUDE: MOVING, SUPPLEMENTING, COVERING, OR REMOVAL OF DEVICES AS DIRECTED BY THE ENGINEER.

THE FOLLOWING GENERAL NOTES APPLY AT ALL TIMES FOR THE DURATION OF THE CONSTRUCTION PROJECT EXCEPT WHEN OTHERWISE NOTED IN THE PLAN OR DIRECTED BY THE ENGINEER.

TRAFFIC PATTERN ALTERATIONS

A) NOTIFY THE ENGINEER THIRTY (30) CALENDAR DAYS PRIOR TO ANY TRAFFIC PATTERN ALTERATION.

SIGNING

B) INSTALL ADVANCE WORK ZONE WARNING SIGNS WHEN WORK IS WITHIN 40 FT FROM THE EDGE OF TRAVEL LANE AND NO MORE THAN THREE (3) DAYS PRIOR TO THE BEGINNING OF CONSTRUCTION.

C) ENSURE ALL NECESSARY SIGNING IS IN PLACE PRIOR TO ALTERING ANY TRAFFIC PATTERN.

TRAFFIC CONTROL DEVICES

D) WHEN LANE CLOSURES ARE NOT IN EFFECT SPACE CHANNELIZING DEVICES IN WORK AREAS NO GREATER IN FEET THAN TWICE THE POSTED SPEED LIMIT (MPH) EXCEPT, 10 FT ON-CENTER IN RADII, AND 3 FT OFF THE EDGE OF AN OPEN TRAVELWAY. REFER TO STANDARD SPECIFICATIONS FOR ROADS AND STRUCTURES SECTIONS 1130 (DRUMS), 1135 (CONES) AND 1180 (SKINNY DRUMS) FOR ADDITIONAL REQUIREMENTS.

E) PLACE TYPE III BARRICADES, WITH "ROAD CLOSED" SIGN R11-2 ATTACHED OF SUFFICIENT LENGTH TO CLOSE ENTIRE ROADWAY.

PAVEMENT MARKINGS AND MARKERS

F) INSTALL TEMPORARY PAVEMENT MARKINGS AND TEMPORARY PAVEMENT MARKERS ON INTERIM LAYERS OF PAVEMENT AS FOLLOWS:

ROAD NAME	MARKINGS	MARKER
MEAT CAMP ROAD	PAINT	NO

G) PLACE ONE APPLICATION OF PAINT FOR TEMPORARY TRAFFIC PATTERNS. PLACE A SECOND APPLICATION OF PAINT SIX (6) MONTHS AFTER THE INITIAL APPLICATION AND EVERY SIX MONTHS AS DIRECTED BY THE ENGINEER.

H) REMOVE/REPLACE ANY CONFLICTING/DAMAGED PAVEMENT MARKINGS AND MARKERS BY THE END OF EACH DAYS OPERATIONS.

$$$$$SYSTIME$$$$$
$$$$$

Docusign Envelope ID: A4C85892-DFF7-88C3-8168-668253DB637A

11/14/23

PHASE II STEP 1 DETAIL

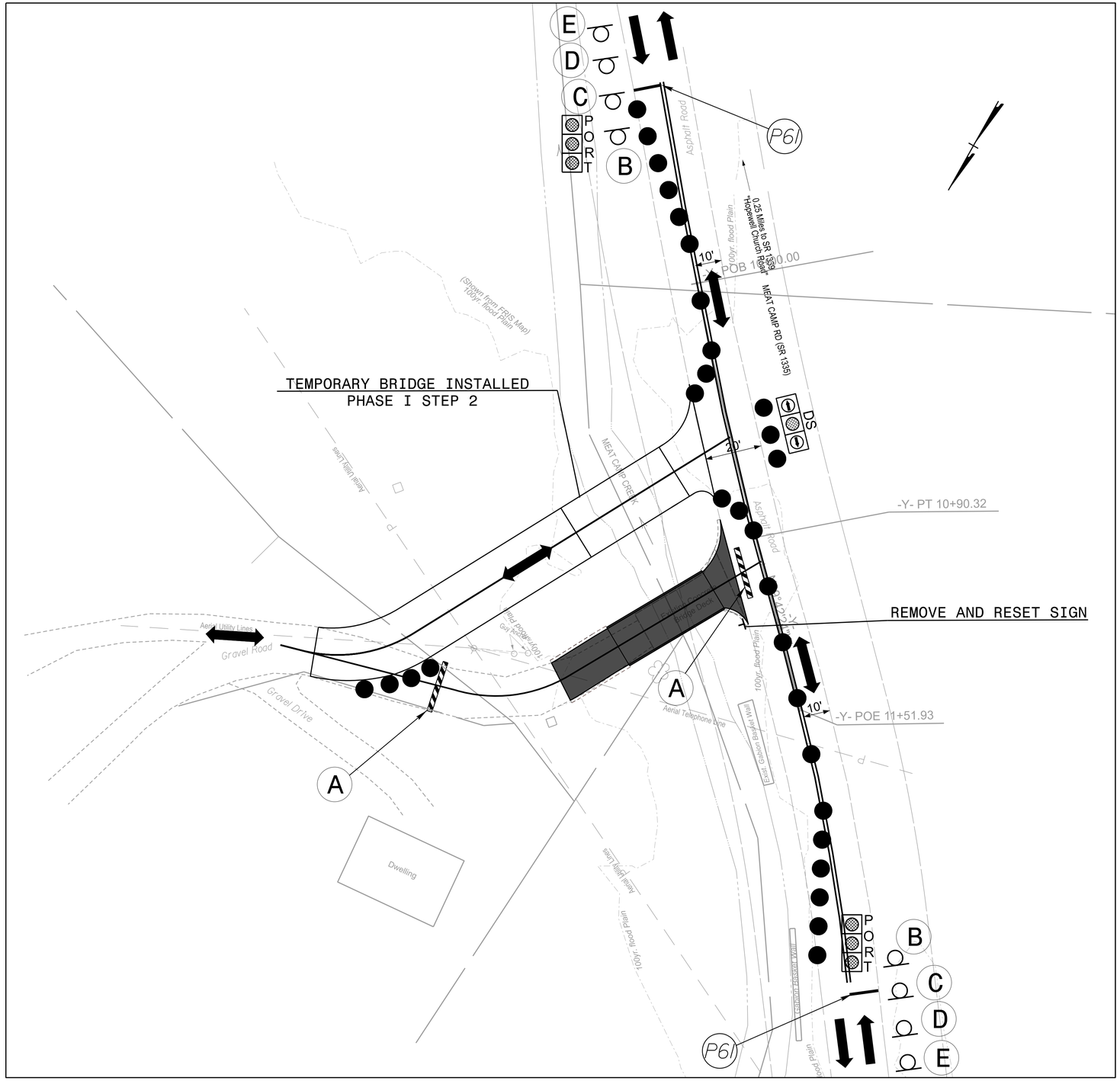



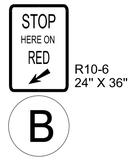

R10-6
24" X 36"



W20-4
48" X 48"



W3-4
48" X 48"

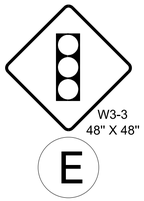

W3-3
48" X 48"

NOTE: REFER TO RSD 1101.11 1 & 4, FOR SIGNAL AND SIGN SPACING.

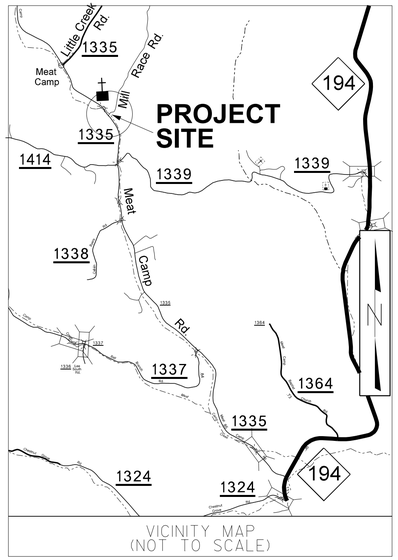

095-01 86E4F

TMP 2

NORTH CAROLINA
DEPARTMENT OF TRANSPORTATION
WATAUGA COUNTY

ROADWAY DESIGN UNIT

ROADWAY DESIGN ENGINEER

NORTH CAROLINA PROFESSIONAL SEAL 057348 ENGINEER SARA S. LOWELL

Signed by: Sara Lowell
10/16/2026

DOCUMENT NOT CONSIDERED FINAL UNLESS ALL SIGNATURES COMPLETED

WORK ZONE TRAFFIC CONTROL ENGINEER

NORTH CAROLINA PROFESSIONAL SEAL 057348 ENGINEER SARA S. LOWELL

Signed by: Sara Lowell
10/16/2026

PREPARED BY

STV Engineers, Inc.
2151 Hawkins Street, Suite 1400
Charlotte, NC 28203
NC License Number F-0991

REVISIONS

Docusign Envelope ID: A4C85892-DFF7-88C3-8168-668253DB637A

PROJECT REFERENCE NO.	SHEET NO.
095-01 86E4F	EC-1

STV Engineers, Inc.
400 Hillsborough Street, Suite 430
Raleigh, NC 27603
NC License Number F-0991

ONSITE CONCRETE WASHOUT STRUCTURE WITH LINER

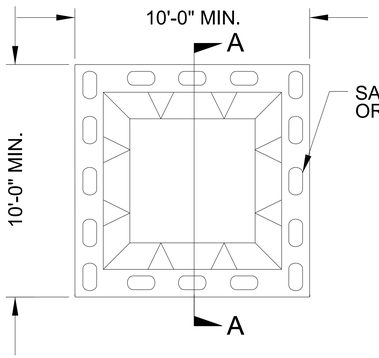

PLAN

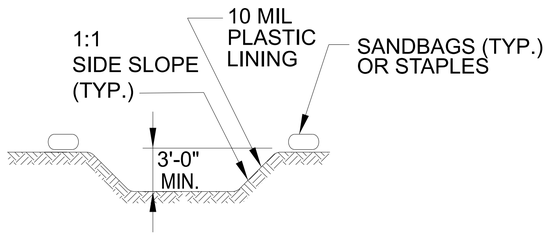

SECTION A-A



NOTES:
1. ACTUAL LOCATION DETERMINED IN FIELD

2. THE CONCRETE WASHOUT STRUCTURES SHALL BE MAINTAINED WHEN THE LIQUID AND/OR SOLID REACHES 75% OF THE STRUCTURES CAPACITY TO PROVIDE ADEQUATE HOLDING CAPACITY WITH A MINIMUM 12 INCHES OF FREEBOARD.

3.CONCRETE WASHOUT STRUCTURE NEEDS TO BE CLEARLY MARKED WITH SIGNAGE NOTING DEVICE.

BELOW GRADE WASHOUT STRUCTURE

NOT TO SCALE

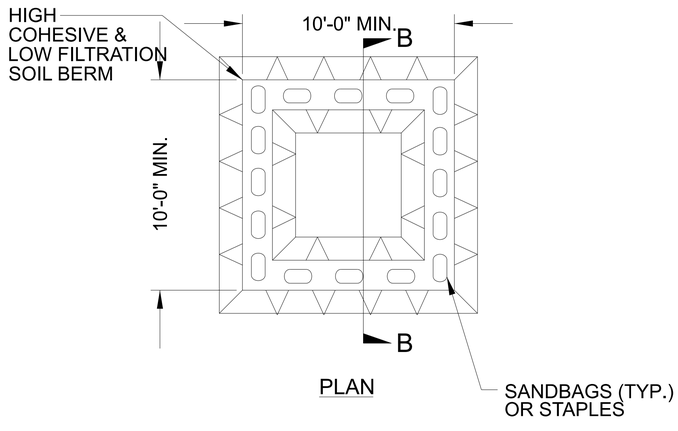

PLAN

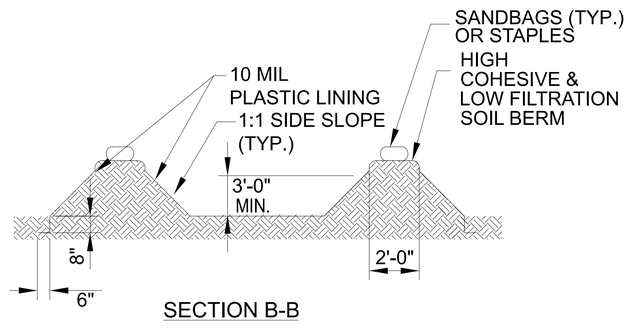

SECTION B-B

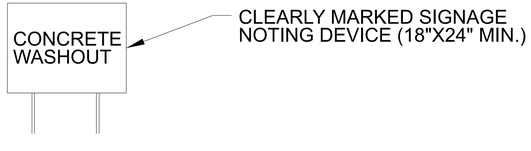

NOTES:
1. ACTUAL LOCATION DETERMINED IN FIELD

2. THE CONCRETE WASHOUT STRUCTURES SHALL BE MAINTAINED WHEN THE LIQUID AND/OR SOLID REACHES 75% OF THE STRUCTURES CAPACITY TO PROVIDE ADEQUATE HOLDING CAPACITY WITH A MINIMUM 12 INCHES OF FREEBOARD.

3.CONCRETE WASHOUT STRUCTURE NEEDS TO BE CLEARLY MARKED WITH SIGNAGE NOTING DEVICE.

ABOVE GRADE WASHOUT STRUCTURE

NOT TO SCALE

Docusign Envelope ID: A4C85892-DFF7-88C3-8168-668253DB637A

PROJECT REFERENCE NO.	SHEET NO.
095-01 86E4F	EC-2

STV Engineers, Inc.
400 Hillsborough Street, Suite 430
Raleigh, NC 27603
NC License Number F-0991

DIVISION OF HIGHWAYS
STATE OF NORTH CAROLINA

SOIL STABILIZATION TIMEFRAMES

SITE DESCRIPTION	STABILIZATION TIME	TIMEFRAME EXCEPTIONS
PERIMETER DIKES, SWALES, DITCHES AND SLOPES	7 DAYS	NONE
HIGH QUALITY WATER (HQW) ZONES	7 DAYS	NONE
SLOPES STEEPER THAN 3:1	7 DAYS	IF SLOPES ARE 10' OR LESS IN LENGTH AND ARE NOT STEEPER THAN 2:1, 14 DAYS ARE ALLOWED.
SLOPES 3:1 TO 4:1	14 DAYS	7 DAYS FOR SLOPES GREATER THAN 50' IN LENGTH WITH SLOPES STEEPER THAN 4:1. 7 DAYS FOR PERIMETER DIKES, SWALES, DITCHES PERIMETER SLOPES, AND HQW ZONES
ALL OTHER AREAS WITH SLOPES FLATTER THAN 4:1	14 DAYS	7 DAYS FOR PERIMETER DIKES, SWALES, DITCHES PERIMETER SLOPES, AND HQW ZONES

Docusign Envelope ID: A4C85892-DFF7-88C3-8168-668253DB637A

11/14/23

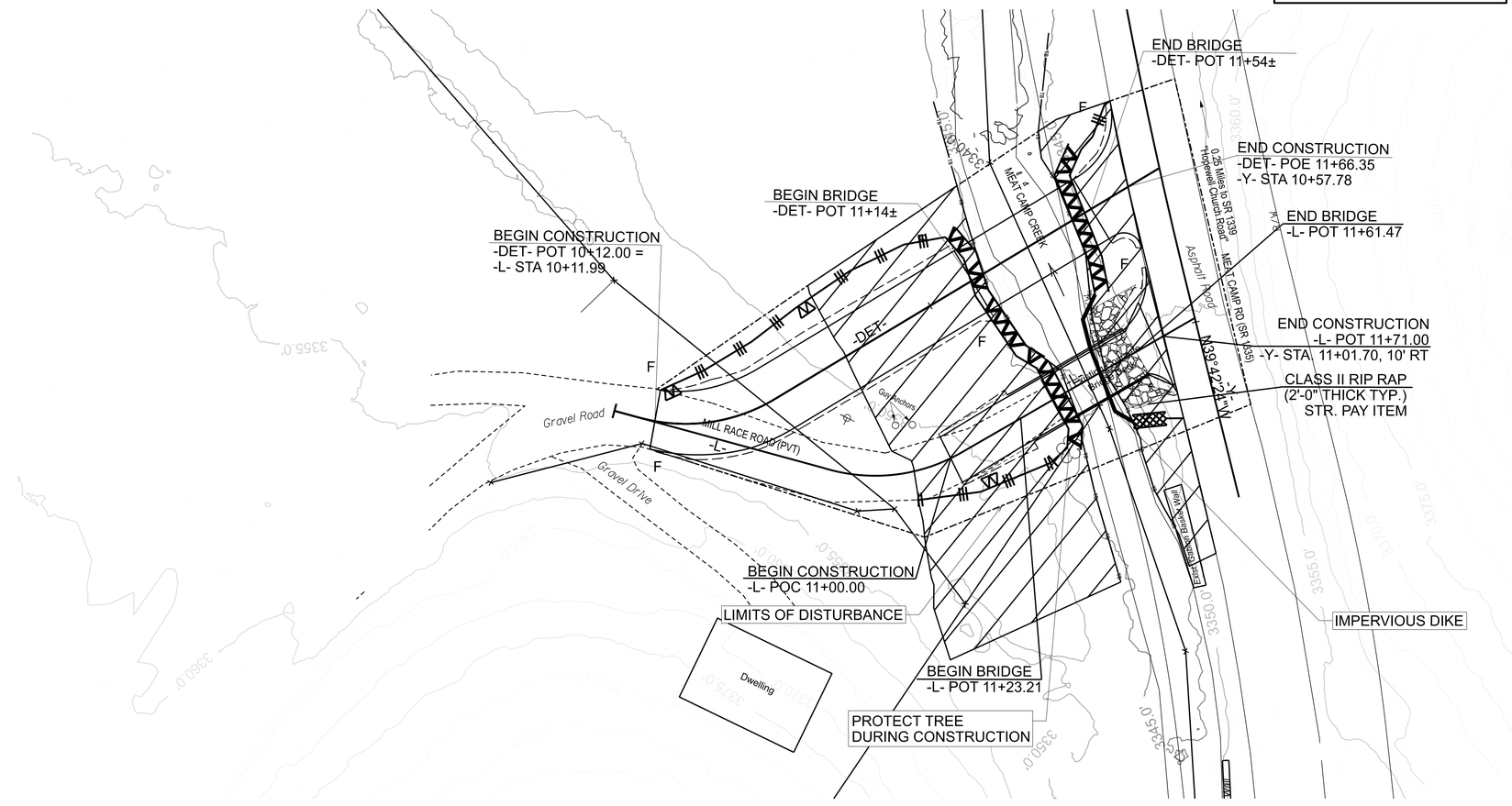

CLEARING AND GRUBBING EROSION CONTROL TO REMAIN IN PLACE UNTIL DECONSTRUCTION OF TEMPORARY BRIDGE

EROSION CONTROL SHOWN SHALL BE PLACED UNDER BRIDGE WHEN APPLICABLE

CLEARING AND GRUBBING EROSION CONTROL

ENVIRONMENTALLY SENSITIVE AREA SEE PROJECT SPECIAL PROVISIONS

ENVIRONTMENTALLY SENSITIVE AREA DESIGNATION INCLUDES TROUT STREAM BUFFERS

HIGH QUALITY WATER(S) EXIST ON THIS PROJECT

High Quality Water Zone(s) Exist
From Sta. -L- 10+00
to Sta. -L- 11+71
Refer To E. C. Special Provisions for Special Considerations.

ENVIRONMENTALLY SENSITIVE AREA(S) EXIST ON THIS PROJECT

Refer To E. C. Special Provisions for Special Considerations.

LIMITS OF DISTURBANCE
0.29 ACRES

ROADSIDE ENVIRONMENTAL UNIT
DEPARTMENT OF TRANSPORTATION
DIVISION OF HIGHWAYS
RALEIGH, N.C.

2024 STANDARD SPECIFICATIONS

NCEM GROW
095-01 86E4F
NORTH CAROLINA
DEPARTMENT OF TRANSPORTATION
WATAUGA COUNTY



ROADWAY DESIGN UNIT

PREPARED BY

STV Engineers, Inc.
2151 Hawkins Street, Suite 1400
Charlotte, NC 28203
NC License Number F-0991

REVISIONS

THESE EROSION AND SEDIMENT CONTROL PLANS COMPLY WITH THE REGULATIONS SET FORTH BY THE NCG-010000 GENERAL CONSTRUCTION PERMIT EFFECTIVE APRIL 1, 2019 ISSUED BY THE NORTH CAROLINA DEPARTMENT OF ENVIRONMENTAL QUALITY DIVISION OF WATER RESOURCES

Prepared in the Office of:

STV Engineers, Inc.
400 Hillsborough Street, Suite 430
Raleigh, NC 27603

Designed by:

JOY SADDLER, PE ***4143***
NAME *LEVEL III CERTIFICATION NO.*

STVGROUP/SeidelM - 10/15/2026

Roadway Standard Drawings

The "Roadway Standard Drawings"- Roadway Design Unit - N. C. Department of Transportation - Raleigh, N. C., dated January 2024 and the latest revision thereto are applicable to this project and by reference hereby are considered a part of these plans.

THESE EROSION AND SEDIMENT CONTROL PLANS COMPLY WITH THE REGULATIONS SET FORTH BY THE NCG-010000 GENERAL CONSTRUCTION PERMIT EFFECTIVE APRIL 1, 2019 ISSUED BY THE NORTH CAROLINA DEPARTMENT OF ENVIRONMENT AND NATURAL RESOURCES DIVISION OF WATER QUALITY.

EROSION & SEDIMENT CONTROL LEGEND

Std. #	Description	Symbol
1605.01	Temporary Silt Fence	
1606.01	Special Sediment Control Fence	
1633.01	Temporary Rock Silt Check Type A	

Docusign Envelope ID: A4C85892-DFF7-88C3-8168-668253DB637A

11/14/23

FINAL PHASE EROSION CONTROL

ENVIRONMENTALLY SENSITIVE AREA
SEE PROJECT SPECIAL PROVISIONS

ENVIRONTMENTALLY SENSITIVE AREA DESIGNATION INCLUDES TROUT STREAM BUFFERS

EROSION CONTROL SHOWN SHALL BE PLACED UNDER BRIDGE WHEN APPLICABLE

HIGH QUALITY WATER(S) EXIST ON THIS PROJECT

High Quality Water Zone(s) Exist
From Sta. -L- 10+00
to Sta. -L- 11+71
Refer To E. C. Special Provisions for Special Considerations.

ENVIRONMENTALLY SENSITIVE AREA(S) EXIST ON THIS PROJECT

Refer To E. C. Special Provisions for Special Considerations.

LIMITS OF DISTURBANCE
0.29 ACRES

ROADSIDE ENVIRONMENTAL UNIT
DEPARTMENT OF TRANSPORTATION
DIVISION OF HIGHWAYS
RALEIGH, N.C.

2024 STANDARD SPECIFICATIONS

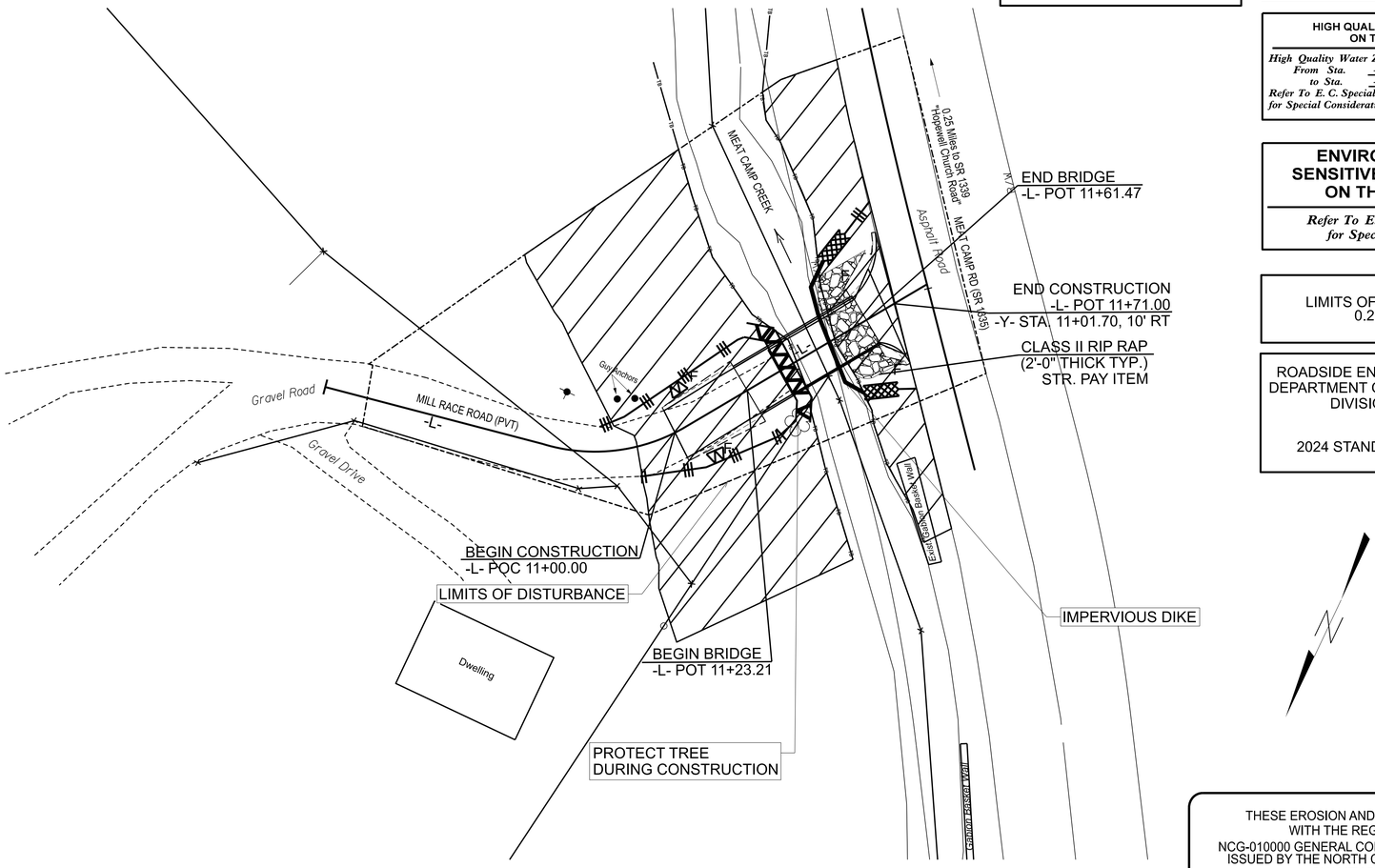

THESE EROSION AND SEDIMENT CONTROL PLANS COMPLY WITH THE REGULATIONS SET FORTH BY THE NCG-010000 GENERAL CONSTRUCTION PERMIT EFFECTIVE APRIL 1, 2019 ISSUED BY THE NORTH CAROLINA DEPARTMENT OF ENVIRONMENTAL QUALITY DIVISION OF WATER RESOURCES

Prepared in the Office of:
STV Engineers, Inc.
400 Hillsborough Street, Suite 430
Raleigh, NC 27603

Designed by:
JOY SADDLER, PE ***4143***
NAME *LEVEL III CERTIFICATION NO.*

Roadway Standard Drawings

The "Roadway Standard Drawings"- Roadway Design Unit - N. C. Department of Transportation - Raleigh, N. C., dated January 2024 and the latest revision thereto are applicable to this project and by reference hereby are considered a part of these plans.

THESE EROSION AND SEDIMENT CONTROL PLANS COMPLY WITH THE REGULATIONS SET FORTH BY THE NCG–010000 GENERAL CONSTRUCTION PERMIT EFFECTIVE APRIL 1, 2019 ISSUED BY THE NORTH CAROLINA DEPARTMENT OF ENVIRONMENT AND NATURAL RESOURCES DIVISION OF WATER QUALITY.

EROSION & SEDIMENT CONTROL LEGEND

Std. #	Description	Symbol
1605.01	Temporary Silt Fence	
1606.01	Special Sediment Control Fence	
1633.01	Temporary Rock Silt Check Type A	

NCEM GROW
095-01 86E4F
NORTH CAROLINA
DEPARTMENT OF TRANSPORTATION
WATAUGA COUNTY



ROADWAY DESIGN UNIT

PREPARED BY
STV Engineers, Inc.
2151 Hawkins Street, Suite 1400
Charlotte, NC 28203
NC License Number F-0991

REVISIONS

Docusign Envelope ID: A4C85892-DFF7-88C3-8168-668253DB637A

11+00 11+50

(-)3.5000% (+)0.5000%

PVI STA. 11+04.40 -L-
PVI EL. = 3349.89
LVC = 18.35'

GRADE DATA

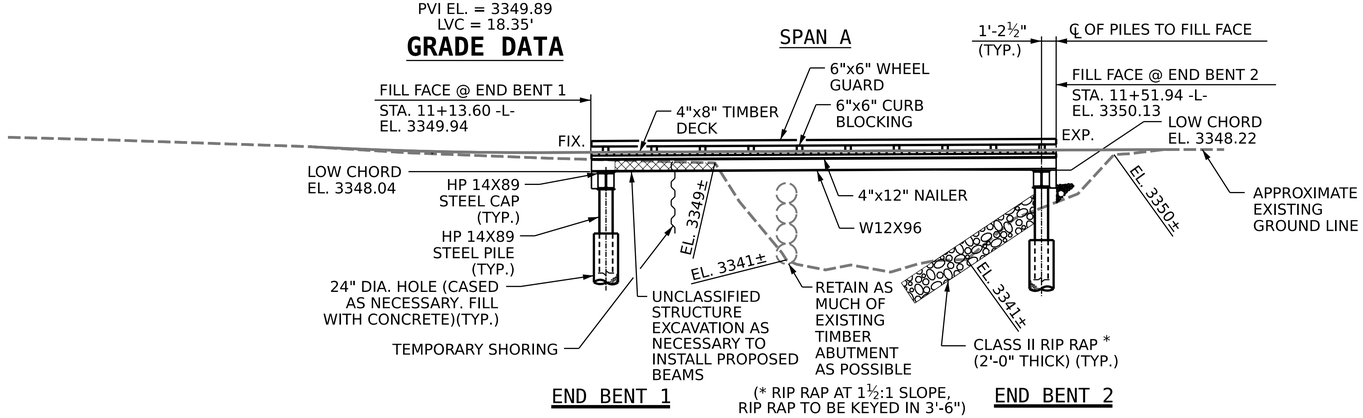

SECTION ALONG -L-

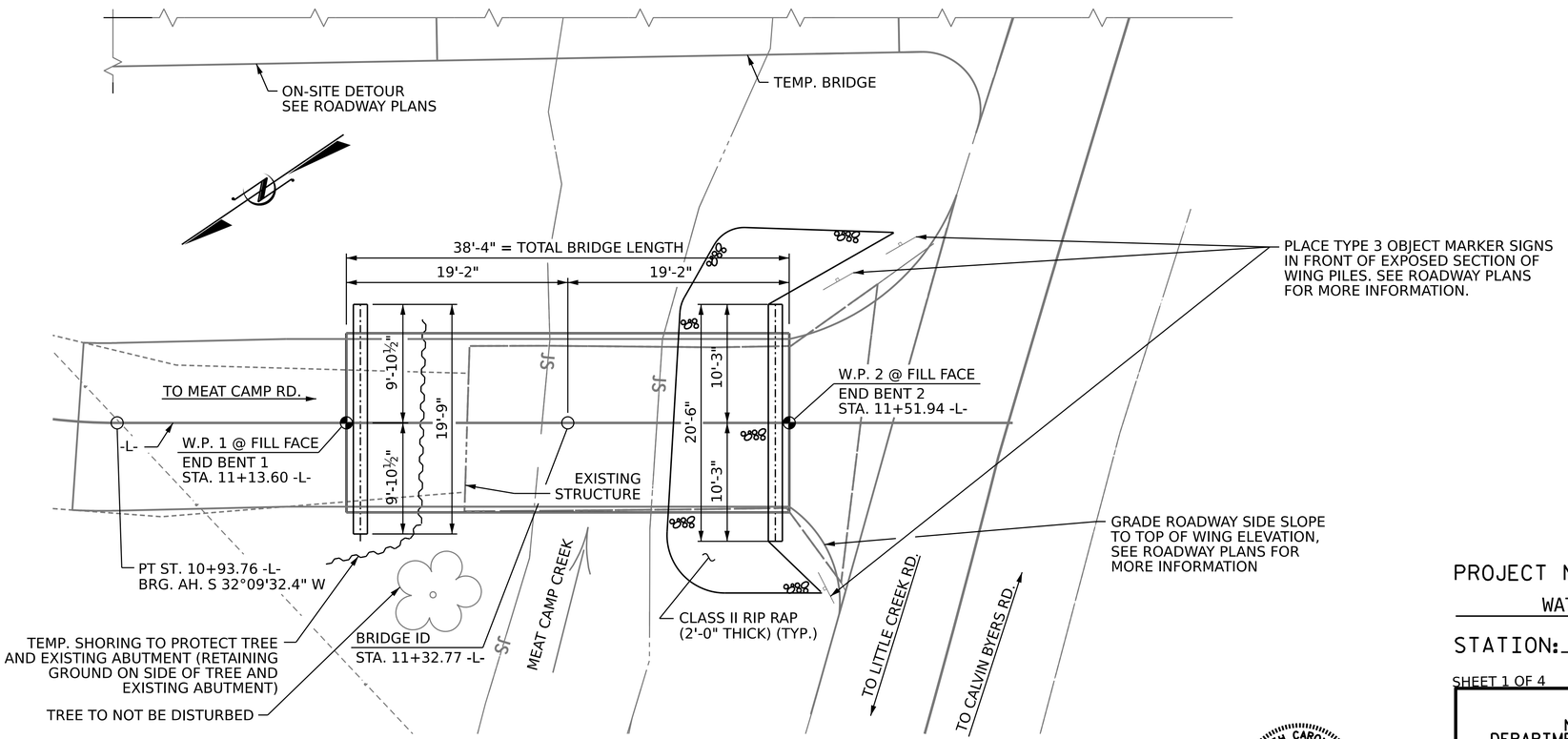

PLAN

(SEE RIP RAP SHEET FOR DIMENSIONS AND ELEVATIONS OF RIP RAP LAYOUT)
(PILES NOT SHOWN FOR CLARITY)

HORIZ. CURVE DATA -L-

PI STA. = 10+74.53 -L-
Δ = 47° 24' 54" (LT)
D = 115° 44' 56.40"
L = 40.96'
T = 21.74'
R = 49.50'

NORTH CAROLINA PROFESSIONAL SEAL 054243 ENGINEER NEIL C. ROHRBAUGH
10/15/2026
Signed by: Neil Rohrbaugh F10E19B55FF14DD...

PROJECT NO. 095-01-86E4F
WATAUGA COUNTY
STATION: 11+32.77 -L-

SHEET 1 OF 4

NORTH CAROLINA
DEPARTMENT OF TRANSPORTATION

GENERAL DRAWING PLAN & ELEVATION FOR BRIDGE OVER MEAT CAMP CREEK

DRAWN BY : NCR	DATE : 06-26	DESIGN ENGINEER OF RECORD: N. ROHRBAUGH	DATE : 07-26	DOCUMENT NOT CONSIDERED FINAL UNLESS ALL SIGNATURES COMPLETED
CHECKED BY : NKB	DATE : 06-26			

STV Engineers, Inc.
2151 Hawkins St., Suite 1400
Charlotte, NC 28203
NC License Number F-0991

REVISIONS						SHEET NO.
NO.	BY:	DATE:	NO.	BY:	DATE:	S-1
1			3			TOTAL SHEETS
2			4			16

DATE: 10/8/2026 TIME: 3:26:50 PM
FILE: $FILEL$

Docusign Envelope ID: A4C85892-DFF7-88C3-8168-668253DB637A

NOTES

SEE "PILE FOUNDATION NOTES" SHEETS FOR ALL APPLICABLE FOUNDATION NOTES



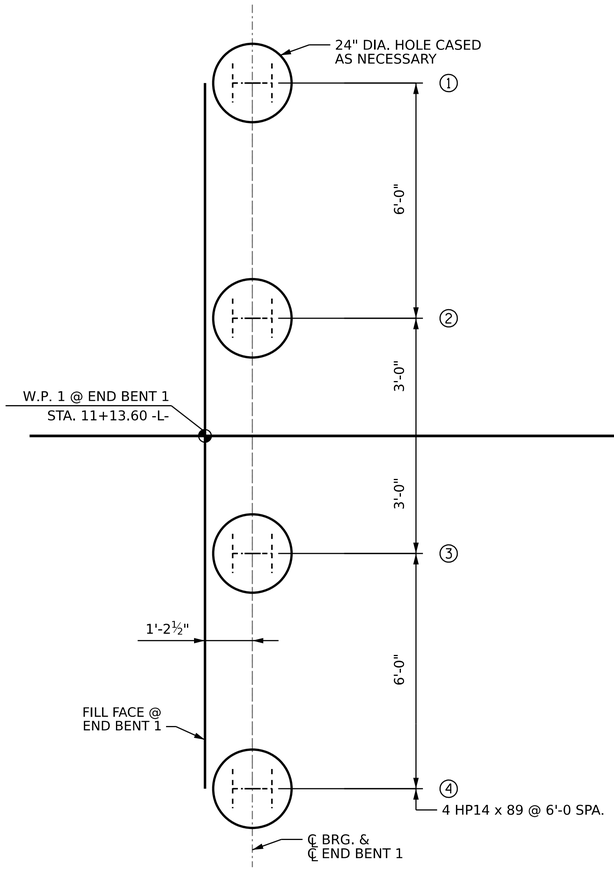

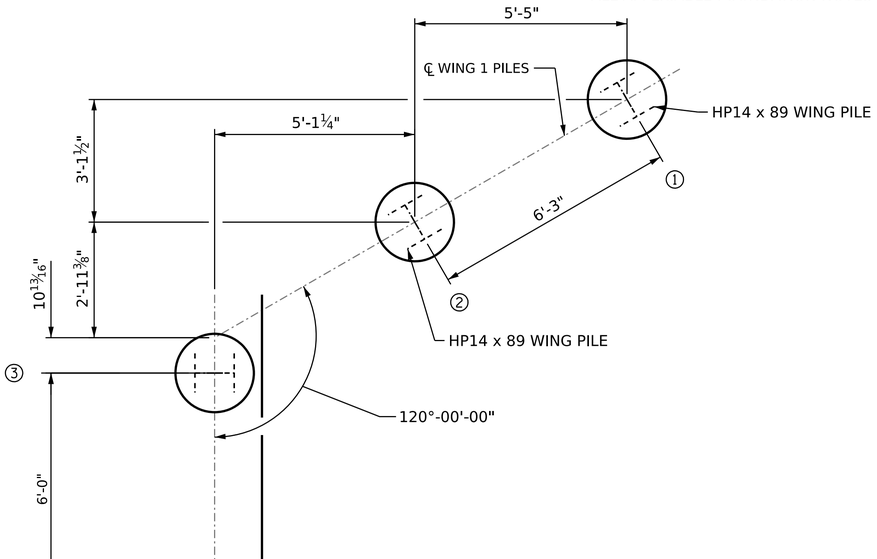

NORTH CAROLINA PROFESSIONAL SEAL 054243 ENGINEER NEIL C. ROHRBAUGH

10/15/2026

Signed by: Neil Rohrbaugh F10E19B55FF14DD...

PROJECT NO. 095-01-86E4F

WATAUGA COUNTY

STATION: 11+32.77 -L-

SHEET 2 OF 4

NORTH CAROLINA
DEPARTMENT OF TRANSPORTATION

FOUNDATION LAYOUT

DRAWN BY : NCR	DATE : 06-26	DESIGN ENGINEER OF RECORD: N. ROHRBAUGH	DATE : 07-26	DOCUMENT NOT CONSIDERED FINAL UNLESS ALL SIGNATURES COMPLETED
CHECKED BY : NKB	DATE : 06-26			

STV Engineers, Inc.
2151 Hawkins St., Suite 1400
Charlotte, NC 28203
NC License Number F-0991

REVISIONS						SHEET NO.
NO.	BY:	DATE:	NO.	BY:	DATE:	S-2
1			3			TOTAL SHEETS
2			4			16

DATE: 10/8/2026 TIME: 3:27:08 PM
FILE: $FILEL$

Docusign Envelope ID: A4C85892-DFF7-88C3-8168-668253DB637A

SUMMARY OF PILE INFORMATION/INSTALLATION

(Blank entries indicate item is not applicable to structure)

End Bent / Bent No, Pile(s) #(-#) (e.g., "Bent 1, Piles 1-5")	Number of Piles per Line	Factored Resistance per Pile KIPS	Pile Cut-Off (Top of Pile) Elevation FT	Estimated Pile Length per Pile FT	Scour Critical Elevation FT	Driven Piles			Predrilling for Piles **			Drilled-In Piles		
						Minimum Pile Tip (Tip No Higher Than) Elevation FT	Required Driving Resistance (RDR)* per pile KIPS	Pile Redrives Quantity EACH	Predrilling Length per Pile LIN FT	Predrilling Elevation (Elevation Not To Predrill Below) FT	Maximum Predrilling Diameter INCHES	Pile Excavation (Bottom of Hole) Elevation FT	Pile Excavation Not In Soil per Pile LIN FT	Pile Excavation In Soil per Pile LIN FT
End Bent No. 1, Piles 1-4	4	60	3346.56	15								3331.6	11	4
End Bent No. 2, Piles 1-2	2	60	3349.82	15								3334.8	8	7
End Bent No. 2, Piles 3-6	4	60	3346.74	15								3331.7	11	4
End Bent No. 2, Pile 7	1	60	3350.66	15								3335.7	7	8
TOTAL QUANTITY:													111	54

$$^{*}RDR = \frac{Factored\ Resistance + Factored\ Drag\ Load + Factored\ Dead\ Load}{Dynamic\ Resistance\ Factor} + Nominal\ Drag\ Load\ Resistance + Nominal\ Resistance\ from\ Scourable\ Material$$

** Predrilling for Piles is required for end bents/bents with a predrilling length and at the Contractor's option for end bents/bents with predrilling information but no predrilling length.

PILE DESIGN INFORMATION

(Blank entries indicate item is not applicable to structure)

End Bent / Bent No, Pile(s) #(-#) (e.g., "Bent 1, Piles 1-5")	Factored Axial Load per Pile KIPS	Factored Drag Load per Pile KIPS	Factored Dead Load * per Pile KIPS	Dynamic Resistance Factor	Nominal Drag Resistance per Pile KIPS	Nominal Scour Resistance per Pile KIPS
End Bent No. 1, Piles 1-4	58			0.60		
End Bent No. 2, Piles 1-7	58			0.60		

* Factored Dead Load is factored weight of pile above the ground line.

NOTES:

1. THE PILE FOUNDATION TABLES ARE BASED ON THE BRIDGE SUBSTRUCTURE DESIGN AND FOUNDATION RECOMMENDATIONS SEALED BY A NORTH CAROLINA PROFESSIONAL ENGINEER (THOMAS R. WELLS, #037998) ON 06-24-2026.
2. TOTAL PILE DRIVING EQUIPMENT SETUP QUANTITY (NOT SHOWN IN PILE FOUNDATION TABLES) EQUALS THE NUMBER OF DRIVEN PILES, I.E, THE NUMBER OF PILES WITH A REQUIRED DRIVING RESISTANCE.
3. THE ENGINEER MAY ADJUST THE QUANTITY FOR DPT TESTING AND PIPE PILE PLATES WHEN NECESSARY
4. FOR PILES, SEE SECTION 450 OF THE STANDARD SPECIFICATIONS.
5. FILL HOLES FOR PILE EXCAVATION AT END BENT NO. 1 AND END BENT NO. 2 WITH CLASS A CONCRETE.
6. SUBSURFACE DATA IS NOT AVAILABLE AT END BENT NO. 2. PILE LENGTHS ARE BASED ON THE END BENT NO. 1 BORING. IF PILE EXCAVATION HOLES DIFFER FROM THE ANTICIPATED SUBSURFACE CONDITIONS, THE ENGINEER SHOULDCONFIRM IF THE PILE EXCAVATION IS TERMINATED IN WEATHERED ROCK OR ROCK.
7. USE BRIDGE APPROACH FILL - WASHED STONE NO. 57 OR APPROAVED ALTERNATE APPROACH FILL FOR BRIDGE ABUTMENT, SEE ROADWAY STANDARD DRAWINGS 423.01 AT END BENT NO. 1 AND END BENT NO. 2 FOR GEOTEXTILE WRAPPING INFORMATION AND DETAILS.
8. USE VERICAL PILES ACCORDING TO THE STRUCTURAL PLANS.
9. PILE LENGTHS ARE BASED ON PLUMB PILES FROM PILE CUTOFF ELEVATION TO THE ESTIMATED TIP ELEVATION, ROUNDED TO THE NEAREST FIVE FEET.

NORTH CAROLINA PROFESSIONAL SEAL 054243 ENGINEER NEIL C. ROHRBAUGH

10/15/2026

Signed by: Neil Rohrbaugh F10E19B55FF14DD...

PROJECT NO. 095-01-86E4F

WATAUGA COUNTY

STATION: 11+32.77 -L-

SHEET 3 OF 4

NORTH CAROLINA
DEPARTMENT OF TRANSPORTATION
GENERAL DRAWING

PILE FOUNDATION TABLES

DRAWN BY : NCR	DATE : 06-26	DESIGN ENGINEER OF RECORD: N. ROHRBAUGH	DATE : 07-26	DOCUMENT NOT CONSIDERED FINAL UNLESS ALL SIGNATURES COMPLETED
CHECKED BY : NKB	DATE : 06-26			

STV Engineers, Inc.
2151 Hawkins St., Suite 1400
Charlotte, NC 28203
NC License Number F-0991

REVISIONS						SHEET NO.
NO.	BY:	DATE:	NO.	BY:	DATE:	S-3
1			3			TOTAL SHEETS
2			4			16

DATE: 10/8/2026 TIME: 3:27:15 PM
FILE: $FILE1$

Docusign Envelope ID: A4C85892-DFF7-88C3-8168-668253DB637A

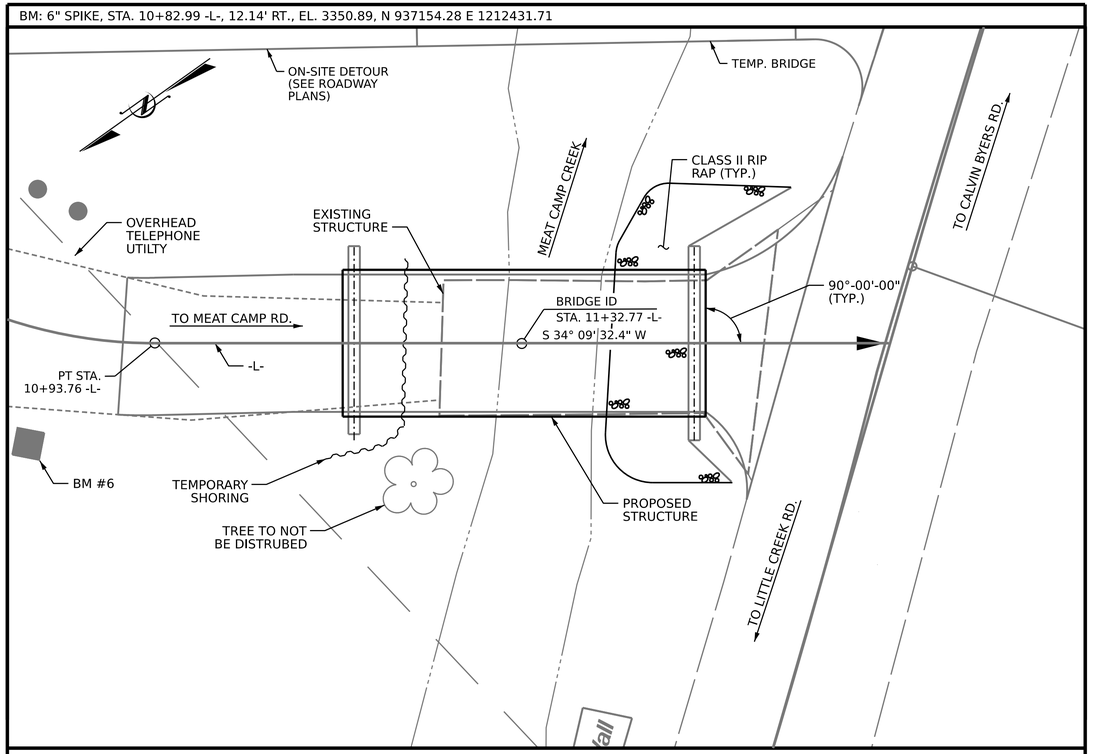

LOCATION SKETCH

NOTES

ASSUMED LIVE LOAD = HS20, EV2, AND EV3 LOADING.

THIS BRIDGE HAS BEEN DESIGNED IN ACCORDANCE WITH THE REQUIREMENTS OF THE AASHTO LRFD BRIDGE DESIGN SPECIFICATIONS.

THIS BRIDGE IS LOCATED IN SEISMIC ZONE 1.

FOR TIMBER MEMBERS, ALL TIMBER AND LUMBER SHALL BE TREATED NO. 1 SOUTHERN PINE AND CONFORM TO SECTION 1082 OF THE STANDARD SPECIFICATIONS.

ALL TIMBER DIMENSIONS SHOWN ON THE PLANS ARE NOMINAL DIMENSIONS.

WHEN FIELD CUTTING TIMBER MEMBERS, TREAT NEWLY EXPOSED SURFACES WITH EITHER A BITUMINOUS ASPHALT-BASED ROOFING CEMENT, COPPER NAPHTHENATE PASTE, OR APPROVED PRESERVATIVE SYSTEM BEFORE INSTALLING.

TREAT ALL DRILLED OR NEWLY EXPOSED HOLES IN TIMBER MEMBERS BY PUMPING WITH BITUMINOUS ASPHALT-BASED ROOFING CEMENT, OR APPROVED PRESERVATIVE SYSTEM BEFORE INSTALLING HARDWARE.

PRE-DRILL HOLES IN TIMBER AND LUMBER MEMBERS ACCEPTING BOLTS TO ELIMINATE SPLITTING.

PRIOR TO INSTALLING TIMBER NAILERS, PLACE A SELF-ADHERING HIGH-DENSITY POLYETHYLENE RUBBERIZED ASPHALT ADHESIVE FLASHING MEMBRANE ON THE TOP FLANGE OF THE STEEL BEAMS.

PRIOR TO INSTALLING TIMBER DECKING MEMBERS, PLACE A SLEF-ADHERING HIGH-DENSITY POLYETHYLENE RUBBERIZED ASPHALT ADHESIVE FLASHING MEMBRANE TO THE TOP SIDE OF THE TIMBER NAILERS.

DO NOT DRIVE LAG/STRUCTURAL SCREWS WITH A HAMMER, SCREW OR TORQUE LAG/STURCUTRAL SCREWS.

SCREWS SHALL PROVIDE SUFFICIENT LENGTH SO THAT SCREW SHANK WILL PENETRATE RECEIVING MEMBERS.

ALL STRUCTURAL STEEL SHALL BE AASHTO M270 GRADE 50 AND PAINTED WITH SYSTEM 1 OR HOT DIPPED GALVANIZED IN ACCORDANCE WITH THE STRUCTURAL STEEL COATINGS PROGRAM AND SECTION 442-8 OF THE STANDARD SPECIFICATIONS, UNLESS OTHERWISE NOTED ON THE PLANS.

ALL HARDWARE SHALL BE GALVANIZED IN ACCORDANCE WITH SECTION 1076 OF THE STANDARD SPECIFICATIONS, UNLESS OTHERWISE NOTED ON THE PLANS.

THE SUBSTRUCTURE OF THE EXISTING BRIDGE INDICATED ON THE PLANS IS FROM THE BEST INFORMATION AVAILABLE. SINCE THIS INFORMATION IS SHOWN FOR THE CONVENIENCE OF THE CONTRACTOR, THE CONTRACTOR SHALL HAVE NO CLAIM WHATSOEVER AGAINST THE DEPARTMENT OF TRANSPORTATION FOR ANY DELAYS OR ADDITIONAL COST INCURRED BASED ON DIFFERENCES BETWEEN THE EXISTING BRIDGE SUBSTRUCTURE SHOWN ON THE PLANS AND THE ACTUAL CONDITIONS AT THE PROJECT SITE.

REMOVAL OF THE EXISTING BRIDGE SHALL BE PERFORMED IN A MANNER THAT PREVENTS DEBRIS FROM FALLING INTO THE WATER. THE CONTRACTOR SHALL SUBMIT DEMOLITION PLANS FOR REVIEW AND REMOVE THE BRIDGE IN ACCORDANCE WITH ARTICLE 402-2 OF THE STANDARD SPECIFICATIONS.

FOR EROSION CONTROL MEASURES, SEE EROSION CONTROL PLANS.

ASPHALT WEARING SURFACE AT THE END OF THE BRIDGE IS INCLUDED IN ROADWAY QUANTITY ON ROADWAY PLANS.

FOR OTHER DESIGN DATA AND GENERAL NOTES, SEE SHEET SN.

FOR SUBMITTAL OF WORKING DRAWINGS, SEE SPECIAL PROVISIONS.

FOR FALSEWORK AND FORMWORK, SEE SPECIAL PROVISIONS.

FOR CRANE SAFETY, SEE SPECIAL PROVISIONS.

FOR GROUT FOR STRUCTURES, SEE SPECIAL PROVISIONS.

FOR ASBESTOS ASSESSMENT, SEE SPECIAL PROVISIONS.

FOR TIMBER BRIDGE DECK SYSTEM INCLUDING HARDWARE FOR BOLT CONNECTIONS AND HARDWARE FOR SCREW CONNECTIONS, SEE TIMBER BRIDGE DECK ON STEEL BEAMS SPECIAL PROVISION.

FOR TIMBER BRIDGE RAIL SYSTEM INCLUDING HARDWARE FOR BOLT CONNECTIONS AND HARDWARE FOR SCREW CONNECTIONS, SEE TIMBER BRIDGE DECK ON STEEL BEAMS SPECIAL PROVISION.

THE CONTRACTOR WILL RETAIN EXISTING ABUTMENTS AS MUCH AS POSSIBLE.

THE MATERIAL IN THE CROSS-HATCHED AREA SHALL BE EXCAVATED FOR A DISTANCE OF 10 FT EACH SIDE OF CENTERLINE ROADWAY AS DIRECTED BY ENGINEER. THIS WORK WILL BE PAID FOR AT THE CONTRACT LUMP SUM PRICE FOR UNCLASSIDIED STRUCTURE EXCAVATION. SEE SECTION 412 OF THE STANDARD SPECIFICATIONS.

TOTAL BILL OF MATERIAL

	CONSTRUCTION, MAINTENANCE, & REMOVAL OF TEMP. STRUCTURE @ STA. 13+33±	TEMPORARY SHORING	PILE EXCAVATION IN SOIL	PILE EXCAVATION NOT IN SOIL	UNCLASSIFIED STRUCTURE EXCAVATION	REMOVAL OF EXISTING STRUCTURE @ STA. 11+33±	ASBESTOS ASSESSMENT	TIMBER BRIDGE DECK SYSTEM	TIMBER BRIDGE RAIL SYSTEM	HARDWARE FOR BOLT CONNECTIONS	HARDWARE FOR SCREW CONNECTIONS	APPROXIMATELY 52,350 LBS. OF STRUCTURAL STEEL	HP 14x89 STEEL PILES		RIP RAP CLASS II (2'-0" THICK)	GEOTEXTILE FOR DRAINAGE	ELASTOMERIC BEARINGS
	LUMP SUM	SQ. FT.	LIN. FT.	LIN. FT.	LUMP SUM	LUMP SUM	LUMP SUM	LUMP SUM	LIN. FT.	LBS.	LBS.	LUMP SUM	NO.	LIN. FT.	TONS	SQ. YD.	LUMP SUM
SUPERSTRUCTURE								LUMP SUM	76.7	436	94	LUMP SUM					
END BENT 1		170	16.0	44.0	LUMP SUM							LUMP SUM	4	60			
END BENT 2			38.0	67.0								LUMP SUM	7	105	34	38	
TOTAL	LUMP SUM	170	54.0	111.0	LUMP SUM	LUMP SUM	LUMP SUM	LUMP SUM	76.7	436	94	LUMP SUM	11	165	34	38	LUMP SUM

PROJECT NO. 095-01-86E4F

WATAUGA COUNTY

STATION: 11+32.77 -L-

SHEET 4 OF 4

NORTH CAROLINA PROFESSIONAL SEAL 054243 ENGINEER NEIL C. ROHRBAUGH

10/15/2026

Signed by: Neil Rohrbaugh F10E19B05FF14CD...

NORTH CAROLINA
DEPARTMENT OF TRANSPORTATION

LOCATION SKETCH AND BILL OF MATERIALS FOR BRIDGE OVER MEAT CAMP CREEK

REVISIONS						SHEET NO.
NO.	BY:	DATE:	NO.	BY:	DATE:	S-4
1			3			TOTAL SHEETS
2			4			16

STV Engineers, Inc.
2151 Hawkins St., Suite 1400
Charlotte, NC 28203
NC License Number F-0991

DRAWN BY : NCR DATE : 06-26
CHECKED BY : NKB DATE : 06-26

DESIGN ENGINEER OF RECORD: N. ROHRBAUGH DATE : 07-26

DOCUMENT NOT CONSIDERED FINAL UNLESS ALL SIGNATURES COMPLETED

DATE: 10/8/2026 TIME: 3:28:33 PM
FILE: $FILEL$

Docusign Envelope ID: A4C85892-DFF7-88C3-8168-668253DB637A

LOAD AND RESISTANCE FACTOR RATING (LRFR) STEEL GIRDERS (W 12 X 96)

LOAD TYPE	VEHICLE	WEIGHT (W) (TONS)	CONTROLLING LOAD RATING (#)	MINIMUM RATING FACTORS (RF)	TONS = W x RF	STRENGTH I LIMIT STATE											SERVICE II LIMIT STATE							COMMENT NUMBER
							MOMENT					SHEAR						MOMENT						
						LIVE-LOAD FACTORS (γ LL)	DISTRIBUTION FACTORS (DF)	RATING FACTOR	SPAN	GIRDER LOCATION	DISTANCE FROM LEFT END OF SPAN (ft)	DISTRIBUTION FACTORS (DF)	RATING FACTOR	SPAN	GIRDER LOCATION	DISTANCE FROM LEFT END OF SPAN (ft)	LIVE-LOAD FACTORS (γ LL)	DISTRIBUTION FACTORS (DF)	RATING FACTOR	SPAN	GIRDER LOCATION	DISTANCE FROM LEFT END OF SPAN (ft)	
DESIGN LOAD	HL-93 (INVENTORY)	N/A	1	1.50	--	1.75	0.299	1.50	A	I	17.96	0.299	3.83	A	I	0.00	N/A	--	--	--	--	--	
EMERGENCY VEHICLE (EV)	EV2	28.750		2.60	74.75	1.30	0.299	2.60	A	I	17.96	0.299	6.72	A	I	0.00	N/A	--	--	--	--	--	
	EV3	43.000	2	1.71	73.53	1.30	0.299	1.71	A	I	17.96	0.299	4.57	A	I	0.00	N/A	--	--	--	--	--	

LOAD FACTORS:

DESIGN LOAD RATING FACTORS	LIMIT STATE	γ DC	γ DW
	STRENGTH I	1.25	1.50
	SERVICE II	1.00	1.00

NOTES:

MINIMUM RATING FACTORS ARE BASED ON THE STRENGTH I AND SERVICE II LIMIT STATES.

ALLOWABLE STRESSES FOR SERVICE II LIMIT STATE ARE AS REQUIRED FOR DESIGN.

COMMENTS:

1.

2.

3.

4.

CONTROLLING LOAD RATING
1 DESIGN LOAD RATING (HL-93)
2 EMERGENCY VEHICLE LOAD RATING
** SEE CHART FOR VEHICLE TYPE
GIRDER LOCATION
I - INTERIOR GIRDER
EL - EXTERIOR LEFT GIRDER
ER - EXTERIOR RIGHT GIRDER

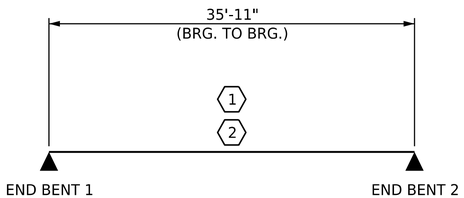

LRFR SUMMARY

PROJECT NO. 095-01-86E4F

WATAUGA COUNTY

STATION: 11+32.77 -L-

NORTH CAROLINA PROFESSIONAL SEAL 054243 ENGINEER NEIL C. ROHRBAUGH

10/15/2026

Signed by: Neil Rohrbaugh F10E19B55FF14DD...

NORTH CAROLINA
DEPARTMENT OF TRANSPORTATION

LRFR SUMMARY FOR 38FT STEEL GIRDERS

(NON-INTERSTATE TRAFFIC)

DRAWN BY : NCR	DATE : 06-26	DESIGN ENGINEER OF RECORD: N. ROHRBAUGH	DATE : 07-26	DOCUMENT NOT CONSIDERED FINAL UNLESS ALL SIGNATURES COMPLETED
CHECKED BY : NKB	DATE : 06-26			

STV Engineers, Inc.
2151 Hawkins St., Suite 1400
Charlotte, NC 28203
NC License Number F-0991

REVISIONS						SHEET NO.
NO.	BY:	DATE:	NO.	BY:	DATE:	S-5
1			3			TOTAL SHEETS
2			4			16

DATE: 10/8/2026 TIME: 3:28:40 PM
FILE: $FILEL$

Docusign Envelope ID: A4C85892-DFF7-88C3-8168-668253DB637A

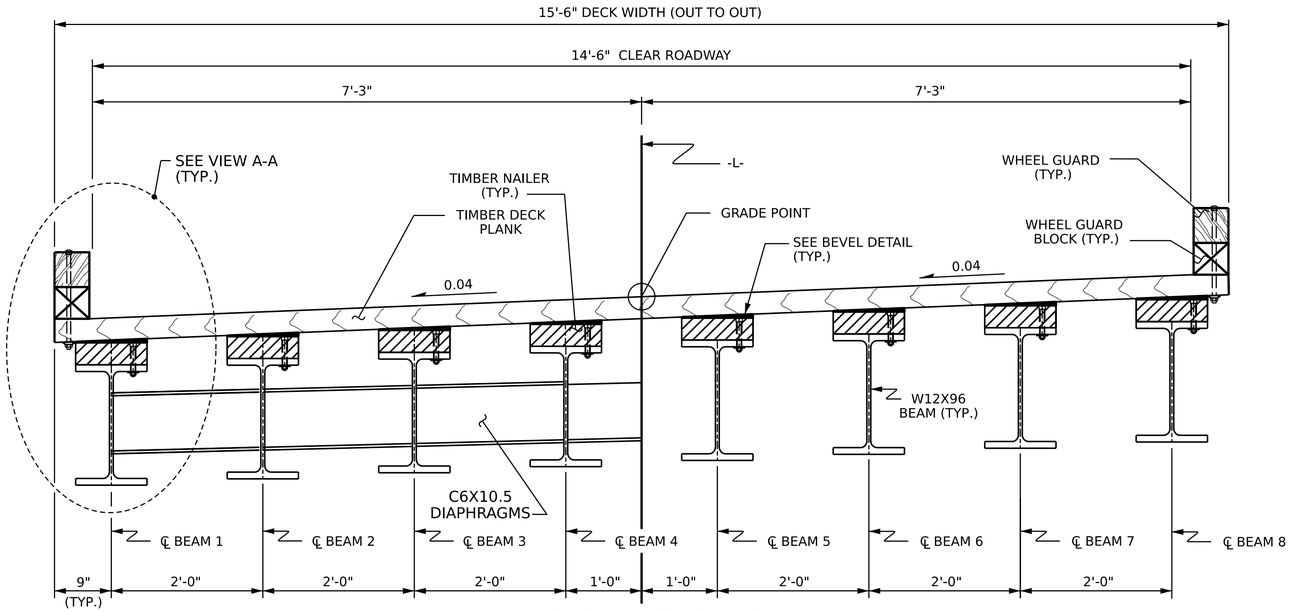

TYPICAL SECTION

(DIAPHRAGM CONNECTIONS NOT SHOWN FOR CLARITY.)

NOTES

FOR TIMBER DECK LAYOUT AND PLACEMENT OF MOISTURE CONTROL FLASHING MEMBRANE, SEE "TIMBER DECK LAYOUT" SHEET.

SEE "TIMBER DECK LAYOUT" SHEET FOR ADDITIONAL NOTES

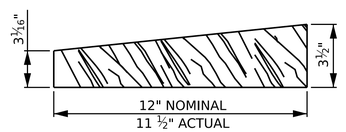

BEVEL DETAIL

(BEAM NAILER SHOWN, BOLTS NOT SHOWN FOR CLARITY)

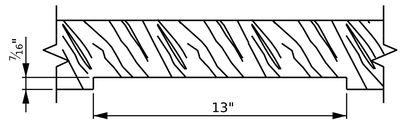

EDGE NAILER NOTCH DETAIL

(TYPICAL EDGE NAILER NOTCH SHOWN, TYPICAL EACH BEAM. BOLTS NOT SHOWN FOR CLARTIY)

(SHIM EACH EDGE NAILER AT EACH BEAM WITH TREATED SHIMS ACCORINGLY TO MATCH BEAM NAILER).

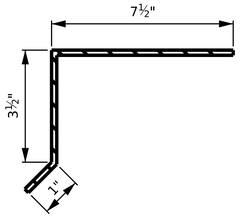

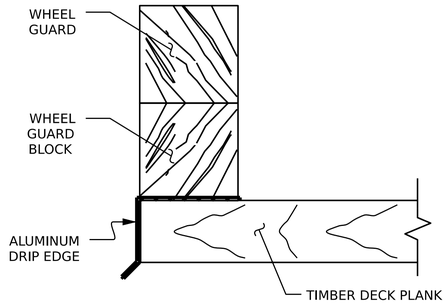

DRIP EDGE DETAILS

POST AND BOLTS NOT SHOWN FOR CLARITY

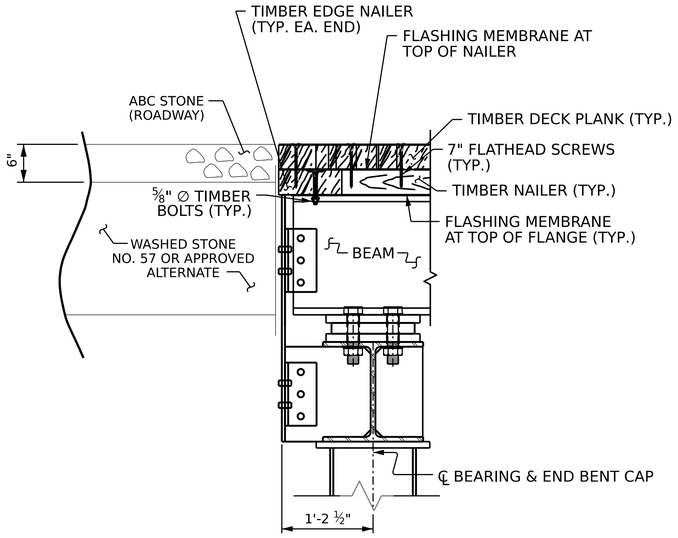

SECTION AT END BENT

END BENT 1 SHOWN, END BENT 2 SIMILAR WITH ASPHALT APPROACH.
SEE END BENT DETAILS SHEET FOR ASPHALT APPROACH

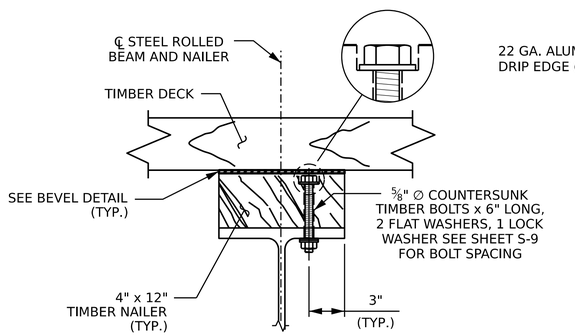

SECTION A-A

SEE SHEET 2 OF 3 FOR SECTION A-A CUT

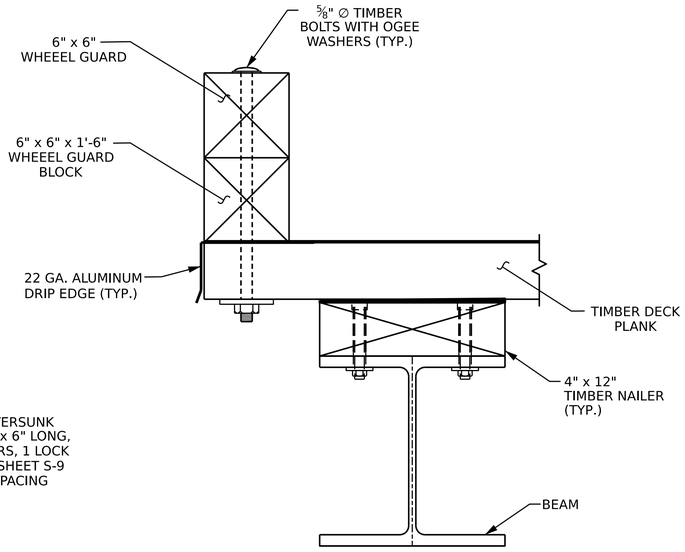

VIEW A-A

NORTH CAROLINA PROFESSIONAL SEAL 054243 ENGINEER NEIL C. ROHRBAUGH

10/15/2026

Signed by: Neil Rohrbaugh F10E19B55FF14DD...

PROJECT NO. 095-01-86E4F

WATAUGA COUNTY

STATION: 11+32.77 -L-

SHEET 1 OF 3

NORTH CAROLINA
DEPARTMENT OF TRANSPORTATION

TYPICAL SECTION

SUPERSTRUCTURE DETAILS

DRAWN BY : NCR	DATE : 06-26	DESIGN ENGINEER OF RECORD: N. ROHRBAUGH	DATE : 07-26	DOCUMENT NOT CONSIDERED FINAL UNLESS ALL SIGNATURES COMPLETED
CHECKED BY : NKB	DATE : 06-26			

STV Engineers, Inc.
2151 Hawkins St., Suite 1400
Charlotte, NC 28203
NC License Number F-0991

REVISIONS						SHEET NO.
NO.	BY:	DATE:	NO.	BY:	DATE:	S-6
1			3			TOTAL SHEETS
2			4			16

DATE: 10/8/2026 TIME: 3:28:59 PM
FILE: $FILEL$

Docusign Envelope ID: A4C85892-DFF7-88C3-8168-668253DB637A

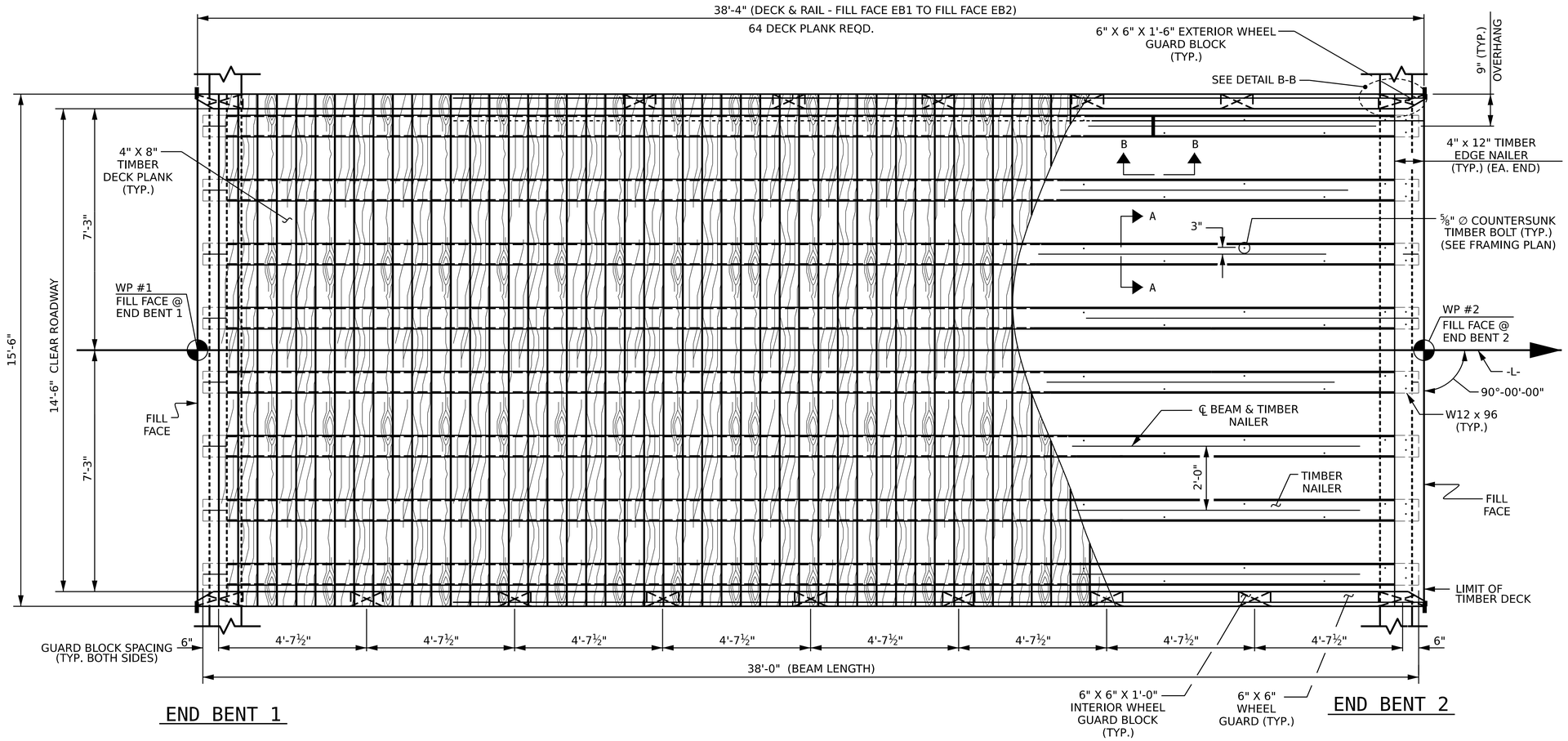

DECK LAYOUT

(DIAPHRAGMS NOT SHOWN FOR CLARITY)

PROJECT NO. 095-01-86E4F

WATAUGA COUNTY

STATION: 11+32.77 -L-

SHEET 2 OF 3

NORTH CAROLINA
DEPARTMENT OF TRANSPORTATION

TIMBER DECK LAYOUT

SUPERSTRUCTURE DETAILS

NORTH CAROLINA PROFESSIONAL SEAL 054243 ENGINEER NEIL C. ROHRBAUGH

10/15/2026

Signed by: Neil Rohrbaugh F10E19B55FF140D...

STV Engineers, Inc.
2151 Hawkins St., Suite 1400
Charlotte, NC 28203
NC License Number F-0991

REVISIONS						SHEET NO.
NO.	BY:	DATE:	NO.	BY:	DATE:	S-7
1			3			TOTAL SHEETS
2			4			16

DRAWN BY : NCR	DATE : 06-26	DESIGN ENGINEER OF RECORD: N. ROHRBAUGH	DOCUMENT NOT CONSIDERED FINAL UNLESS ALL SIGNATURES COMPLETED
CHECKED BY : NKB	DATE : 06-26	DATE : 07-26	

DATE: 10/8/2026 TIME: 3:29:06 PM
FILE: $FILEL$

Docusign Envelope ID: A4C85892-DFF7-88C3-8168-668253DB637A

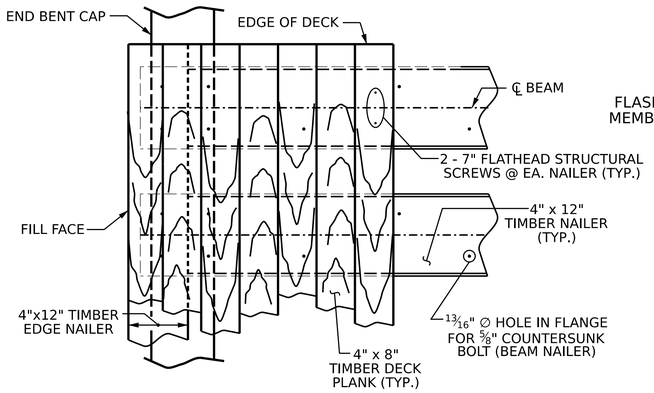

TYPICAL DECK DETAIL AT END BENT

(DETAIL AT END BENT 1 SHOWN, END BENT 2 SIMILAR)
(WHEEL GAURDS AND WHEEL GUARD BLOCKS NOT SHOWN FOR CLARITY)

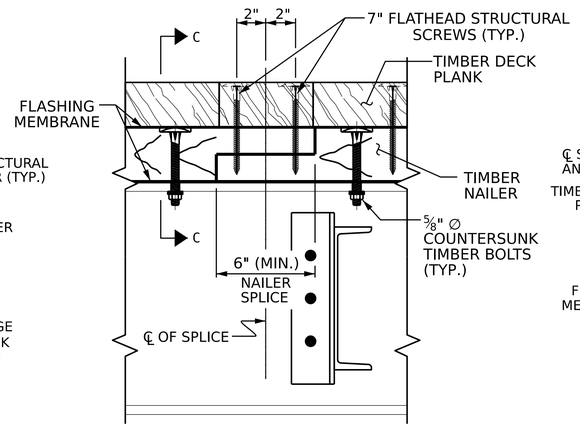

SECTION B-B

(NAILER SPLICE & TIMBER PLANK ATTACHMENT DETAILS)

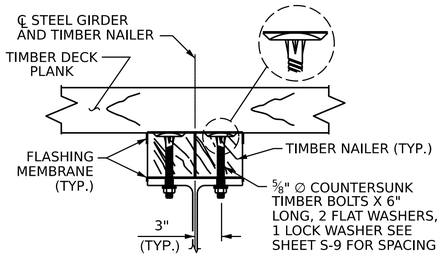

SECTION C-C

DOUBLE TIMBER NAILER ATTACHMENT DETAILS

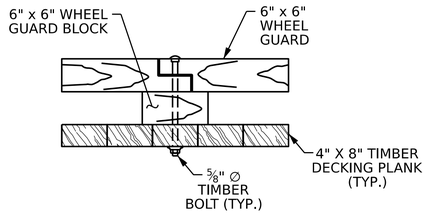

WHEEL GUARD SPLICE DETAIL

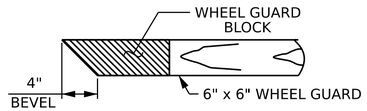

DETAIL B-B

NOTES

FOR ADDITIONAL NOTES, SEE TYPICAL SECTION AND GENERAL DRAWING SHEETS.

STAGGER TIMBER DECK PLANKS BUTT JOINTS AT 4FT MINIMUMS FROM ADJACENT RUNS.

ATTACH TIMBER DECK PLANKS TO NAILERS WITH TWO STRUCTURAL SCREWS PER TIMBER DECK PLANK.

AVOID HITTING NAILER BOLT WHEN DRIVING TIMBER DECK SCREWS.

SEE BEAM DETAILS FOR SPACING OF TIMBER BOLTS IN TOP FLANGE OF ROLLED BEAM.

COUNTERSINK TIMBER BOLT AND STRUCTURAL SCREW HEADS TO BE FLUSH WITH TIMBER SURFACE.

TRIM THE EDGE NAILER FLUSH WITH THE EDGE OF DECK.

DECK PLANK WIDTH MAY BE CUT TO 6" (MIN.) TO FIT WITHIN LIMITS OF TIMBER DECK. ALL DECK PLANKS ATTACHED TO THE EDGE NAILER SHALL BE FULL WIDTH. CUT BOARDS WILL NOT BE PERMITTED TO BE PLACED ADJACENT TO ONE ANOTHER.

TREAT ALL DRILLED OR NEWLY EXPOSED HOLES IN TIMBER MEMBERS BY PUMPING WITH BITUMINOUS ASPHALT-BASED ROOFING CEMENT, OR APPROVED PRESERVATIVE SYSTEM BEFORE INSTALLING HARDWARE.

PRIOR TO PLACING TIMBER NAILER MEMBERS, PLACE A SELF-ADHERING HIGH DENSITY POLYETHYLENE RUBBERIZED ASPHALT ADHESIVE FLASHING MEMBRANE TO THE TOP SIDE OF THE STEEL BEAMS.

*REFERENCE DESIGN VALUES FOR VISUALLY GRADED SOUTHERN PINE (NO. 1 DENSE) DIMENSION LUMBER:

Fbo (FLEXURE) = 1,350 PSI
Fvo (SHEAR) = 175 PSI
Eo (MODULUS OF ELASTICITY) = 1,800,000 PSI

*SOURCE : NATIONAL DESIGN SPECIFICATION (NDS) FOR WOOD CONSTRUCTION (2018 SUPPLEMENT).

BILL OF MATERIAL FOR 38 FT. SPAN

TREATED LUMBER

ITEM	SIZE	LIN. FT.
TIMBER DECK PLANKS	4"x8"	992.0
TIMBER NAILERS	4"x12"	292.0
TIMBER EDGE NAILERS	4"x12"	31.0
FILL FACE COMPACTION BOARD	2"x8"	40.0
TOTAL TREATED LUMBER		1356.0

FLASHING MEMBRANE

ITEM	SIZE	LIN. FT.
TOP OF BEAM	25 MILS	304.0
TOP OF TIMBER NAILERS	25 MILS	292.0
TOP OF TIMBER EDGE NAILERS	25 MILS	31.0
FLASHING MEMBRANE		627.0 LFT.

HARDWARE

ITEM	No.	SIZE	LBS.
5/8" ∅ TIMBER BOLTS	232	5/8"	323.3
HEAVY HEX NUTS	232	5/8"	27.9
STANDARD WASHER	232	5/8"	17.6
LOCK WASHER	232	5/8"	17.6
FLAT HEAD STR. SCREWS	1024	7"	94.1
HARDWARE FOR CONNECTIONS			480.5 LBS.

DRIP EDGE

ITEM	SIZE	LIN. FT.
22 GA. ALUMINUM DRIP EDGE	1'-0"	20.0

STEEL BEAMS

ITEM	No.	LIN. FT.
W12 x 96	8	304.0

BILL OF MATERIAL FOR WHEEL GUARD SYSTEM

TREATED LUMBER

ITEM	SIZE	LIN. FT.
1'-0" INTERIOR WHEEL GUARD BLOCK	6" x 6"	14.0
1'-6" EXTERIOR WHEEL GUARD BLOCK	6" x 6"	6.0
WHEEL GUARD	6" x 6"	76.7
TOTAL TREATED LUMBER		96.7 LFT.

HARDWARE

ITEM	No.	SIZE	LBS.
5/8" ∅ TIMBER BOLTS	18	5/8"	25.2
HEAVY HEX NUTS	18	5/8"	2.2
OGEE WASHER	36	5/8"	22.4
HARDWARE FOR CONNECTIONS			49.8 LBS.

NOTE: TIMBER BOARD LENGTHS SHOWN ARE THE NET BOARD LENGTHS (AFTER CUTS) INCORPORATED IN THE STRUCTURE

PROJECT NO. 095-01-86E4F

WATAUGA COUNTY

STATION: 11+32.77 -L-

SHEET 3 OF 3

SEAL 054243 NORTH CAROLINA PROFESSIONAL ENGINEER NEIL C. ROHRBAUGH

10/15/2026

Signed by: Neil Rohrbaugh F10E19B55FF14DD...

NORTH CAROLINA
DEPARTMENT OF TRANSPORTATION

TIMBER DECK LAYOUT

SUPERSTRUCTURE DETAILS

DRAWN BY : NCR	DATE : 06-26	DESIGN ENGINEER OF RECORD: N. ROHRBAUGH	DATE : 07-26	DOCUMENT NOT CONSIDERED FINAL UNLESS ALL SIGNATURES COMPLETED
CHECKED BY : NKB	DATE : 06-26			

STV Engineers, Inc.
2151 Hawkins St., Suite 1400
Charlotte, NC 28203
NC License Number F-0991

REVISIONS						SHEET NO.
NO.	BY:	DATE:	NO.	BY:	DATE:	S-8
1			3			TOTAL SHEETS
2			4			16

DATE: 10/8/2026 TIME: 3:29:13 PM
FILE: $FILEL$

Docusign Envelope ID: A4C85892-DFF7-88C3-8168-668253DB637A

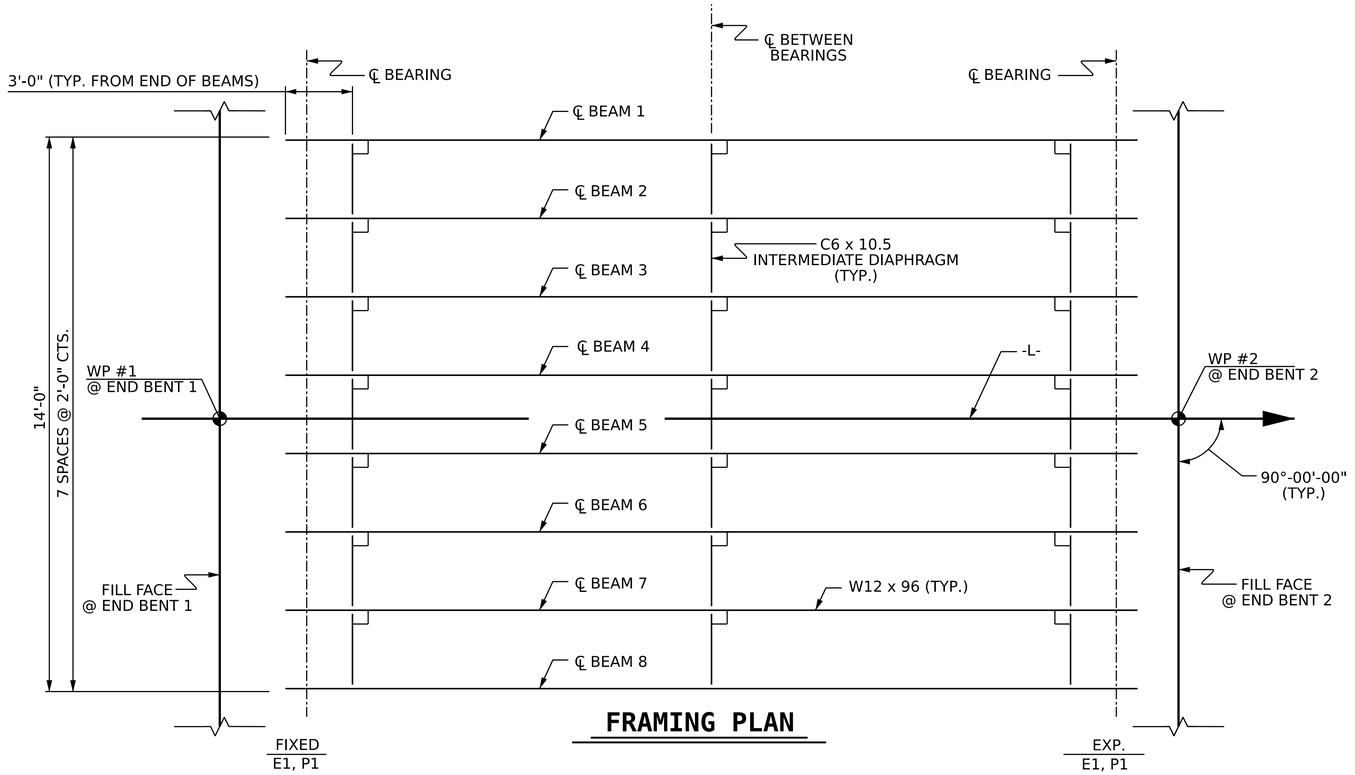

FRAMING PLAN

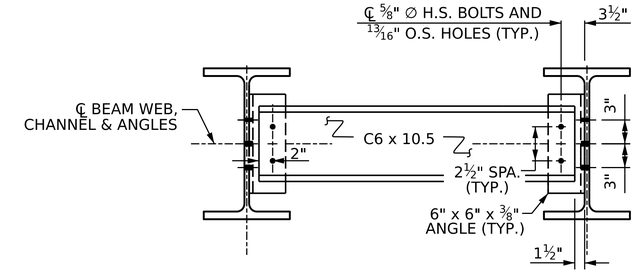

INTERIOR DIAPHRAGM DETAIL

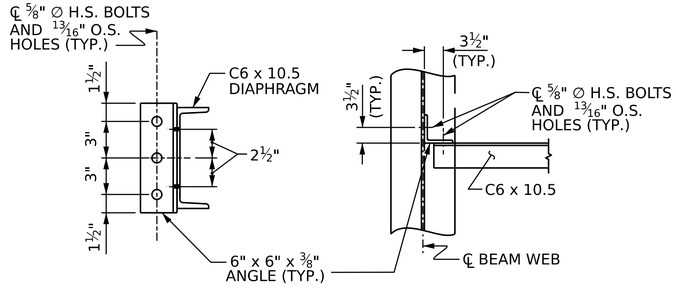

CONNECTION DETAIL

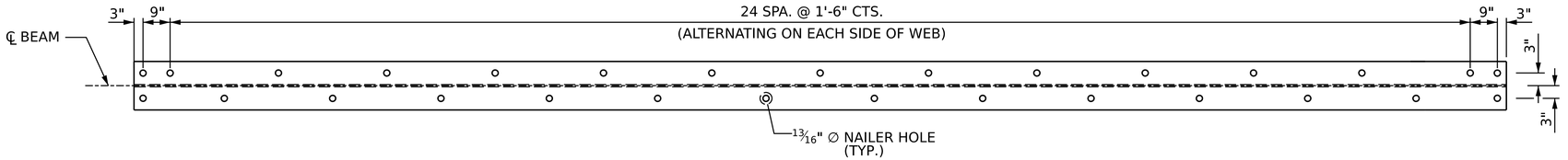

TOP FLANGE

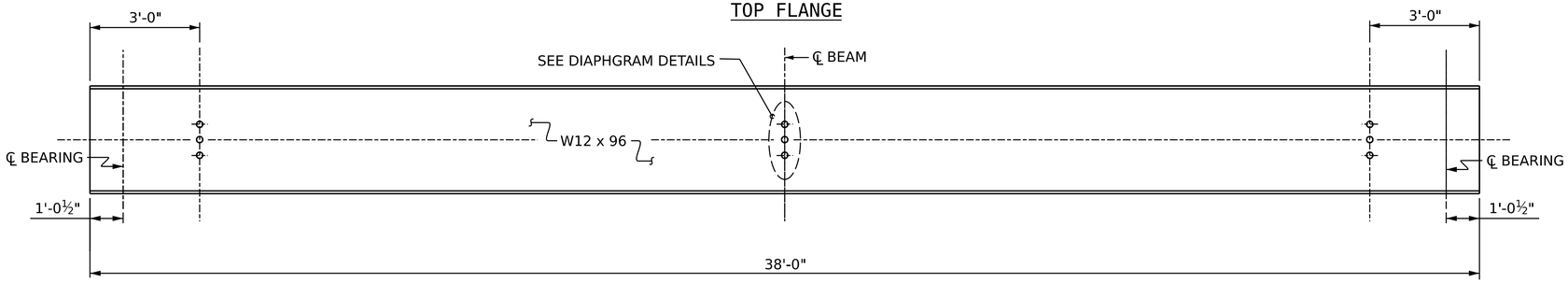

ELEVATION

BEAM DETAILS

PROJECT NO. 095-01-86E4F

WATAUGA COUNTY

STATION: 11+32.77 -L-

NORTH CAROLINA
DEPARTMENT OF TRANSPORTATION

SUPERSTRUCTURE

FRAMING PLAN FOR 38' BEAM LENGTH 90° SKEW

NORTH CAROLINA PROFESSIONAL SEAL 054243 ENGINEER NEIL C. ROHRBAUGH

10/15/2026

Signed by: Neil Rohrbaugh F10E19B55FF14DD...

STV Engineers, Inc.
2151 Hawkins St., Suite 1400
Charlotte, NC 28203
NC License Number F-0991

REVISIONS						SHEET NO.
NO.	BY:	DATE:	NO.	BY:	DATE:	S-9
1			3			TOTAL SHEETS
2			4			16

DRAWN BY : NCR DATE : 06-26
CHECKED BY : NKB DATE : 06-26

DESIGN ENGINEER OF RECORD: N. ROHRBAUGH DATE : 07-26

DOCUMENT NOT CONSIDERED FINAL UNLESS ALL SIGNATURES COMPLETED

DATE: 10/8/2026 TIME: 3:29:21 PM
FILE: $FILEL$

Docusign Envelope ID: A4C85892-DFF7-88C3-8168-668253DB637A

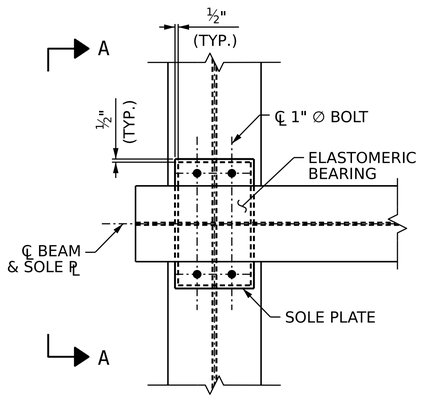

TYPICAL PLAN AT END BENT

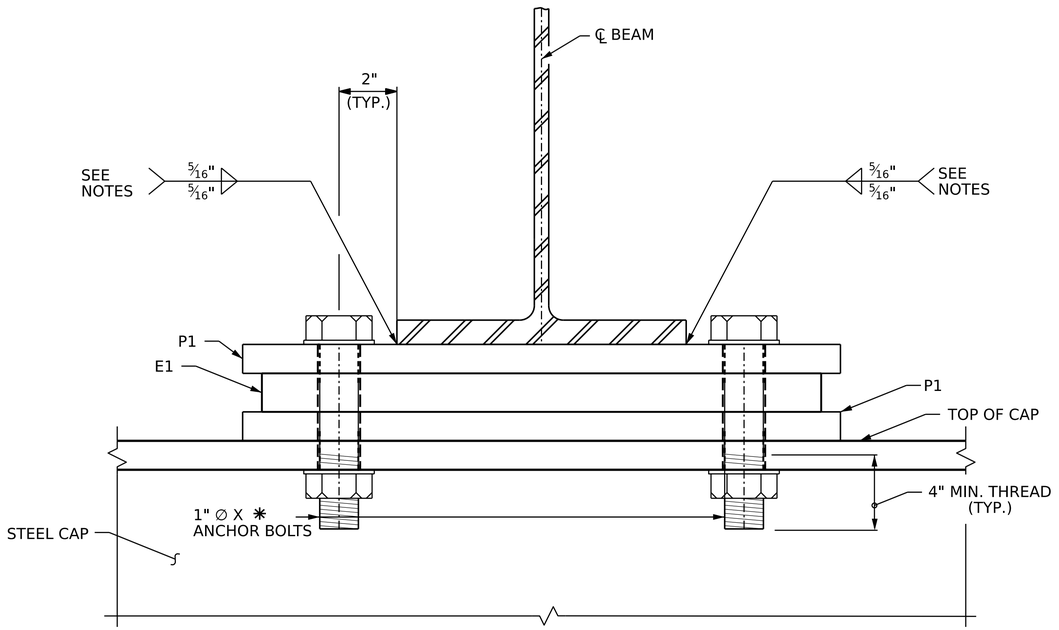

SECTION A-A

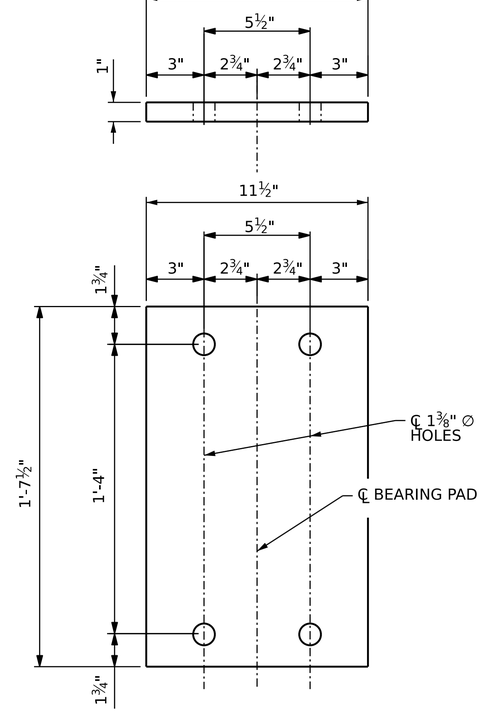

E1 (16 REQ'D)
PLAN VIEW OF ELASTOMERIC BEARING

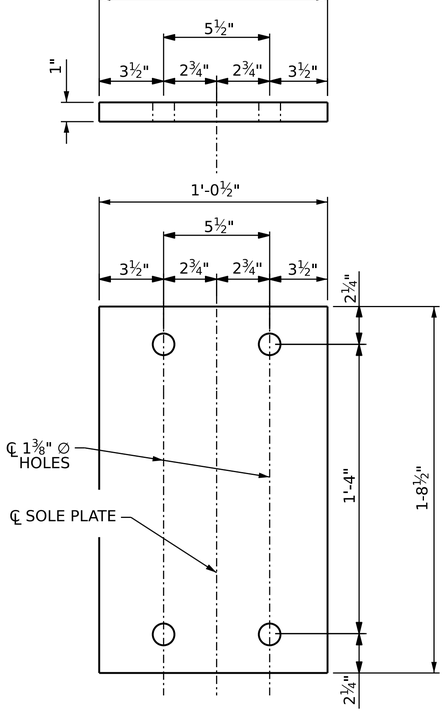

P1 (88 REQ'D)
SOLE PLATE DETAILS

NOTES

AT ALL SUPPORTS, NUTS FOR ANCHOR BOLTS ARE TO BE TIGHTENED FINGER TIGHT AND THEN BACKED OFF ½ TURN. THE THREAD OF THE NUT AND BOLT SHALL THEN BE BURRED WITH A SHARP POINTED TOOL.

FOR PAINTED STRUCTURAL STEEL (EXCLUDING AASHTO M270 GRADE 50W), SOLE PLATES, ANCHOR BOLTS, NUTS, AND WASHERS SHALL BE GALVANIZED IN ACCORDANCE WITH THE STANDARD SPECIFICATIONS.

ANCHOR BOLTS SHALL MEET THE REQUIREMENTS OF ASTM A449. NUTS SHALL MEET THE REQUIREMENTS OF AASHTO M291-DH OR AASHTO M292-2H. WASHERS SHALL MEET THE REQUIREMENTS OF AASHTO M293. SHOP DRAWINGS ARE NOT REQUIRED FOR ANCHOR BOLTS, NUTS, AND WASHERS. SHOP INSPECTION IS REQUIRED.

AT THE CONTRACTORS OPTION, SOLE PLATES AT THE EXPANSION END MAY BE FIELD WELDED.

WHEN FIELD WELDING THE SOLE PLATE TO THE GIRDER FLANGE, USE TEMPERATURE INDICATING WAX PENS, OR OTHER SUITABLE MEANS, TO ENSURE THAT THE TEMPERATURE OF THE SOLE PLATE DOES NOT EXCEED 300° F. TEMPERATURES ABOVE THIS MAY DAMAGE THE ELASTOMER.

ALL SURFACES OF BEARING PLATES SHALL BE SMOOTH AND STRAIGHT.

ELASTOMER BEARINGS SHALL HAVE A SHEAR MODULUS OF 0.160 KSI AND SHALL BE GRADED 50 DUROMETER HARDNESS. IN ACCORDANCE WITH THE STANDARD SPECIFICATIONS AND AASHTO M251.

BEARING ASSEMBLY SHOWN IS AT THE LOWEST BEAM SEAT. SEE END BENT DETAILS FOR STACKED PLATES AT BEARINGS TO ACCOUNT FOR THE SUPERELEVATION.

✱ GRIP LENGTH VARIES FROM 4" TO 11". BOLT LENGTH VARIES FROM 5¾" MIN. TO 1'-0¼" MIN.

PROJECT NO. 095-01-86E4F

WATAUGA COUNTY

STATION: 11+32.77 -L-

NORTH CAROLINA
DEPARTMENT OF TRANSPORTATION

ELASTOMERIC BEARING DETAILS

NORTH CAROLINA PROFESSIONAL SEAL 054243 ENGINEER NEIL C. ROHRBAUGH

10/15/2026

Signed by: Neil Rohrbaugh F10E19B55FF14DD...

DRAWN BY : FMW	DATE : 05-26	DESIGN ENGINEER OF RECORD: N. ROHRBAUGH	DATE : 07-26	DOCUMENT NOT CONSIDERED FINAL UNLESS ALL SIGNATURES COMPLETED
CHECKED BY : MDN	DATE : 05-26			

STV Engineers, Inc.
2151 Hawkins St., Suite 1400
Charlotte, NC 28203
NC License Number F-0991

REVISIONS						SHEET NO.
NO.	BY:	DATE:	NO.	BY:	DATE:	S-10
1			3			TOTAL SHEETS
2			4			16

DATE: 10/8/2026 TIME: 3:29:28 PM
FILE: $FILE1$

Docusign Envelope ID: A4C85892-DFF7-88C3-8168-668253DB637A

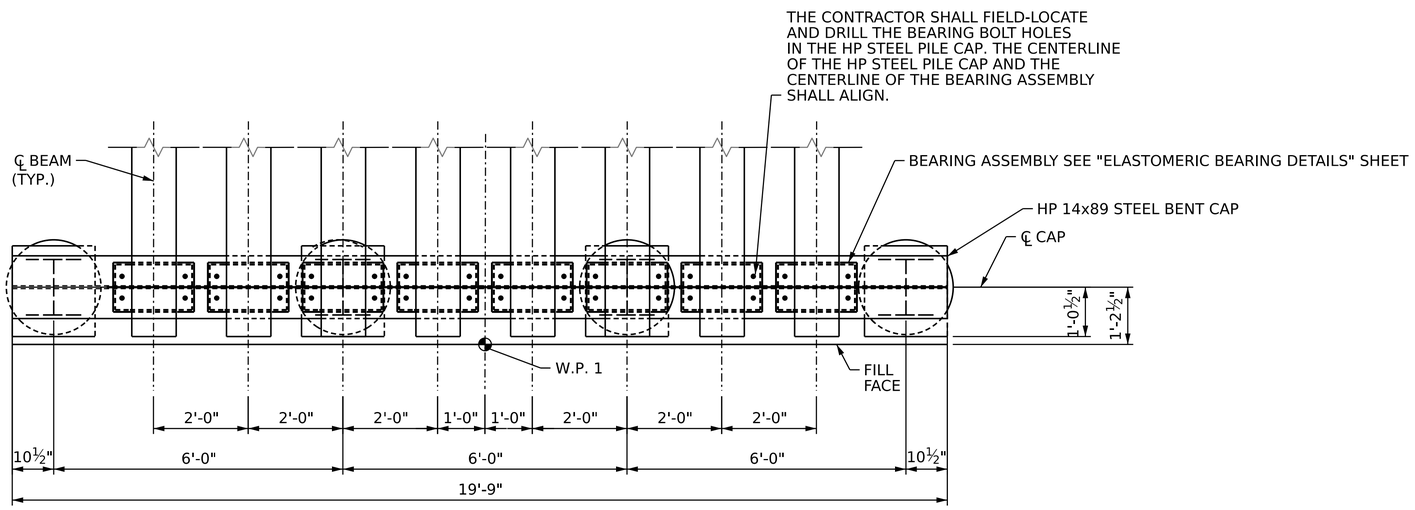

PLAN VIEW

(FOR CLARITY TIMBER DECK, NAILERS, AND STEEL BACKWALL NOT SHOWN.)

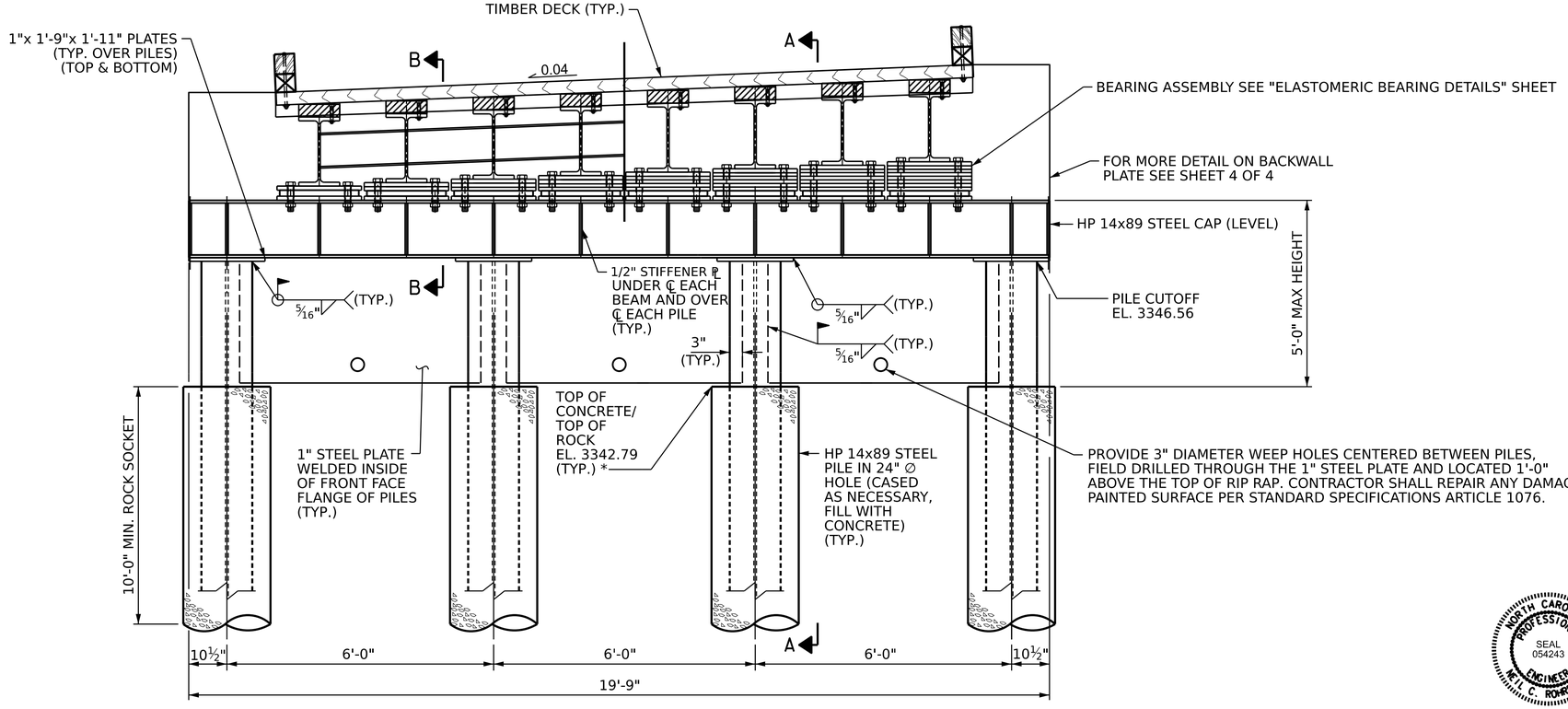

ELEVATION VIEW

* TOP OF CONCRETE/TOP OF ROCK ELEVATION SUBJECT TO CHANGE IF ROCK IS HIGHER THAN EXPECTED

PROJECT NO. 095-01-86E4F

WATAUGA COUNTY

STATION: 11+32.77 -L-

SHEET 1 OF 4

NORTH CAROLINA DEPARTMENT OF TRANSPORTATION

END BENT 1 PLAN AND ELEVATION

NORTH CAROLINA PROFESSIONAL SEAL 054243 ENGINEER NEIL C. ROHRBAUGH

10/15/2026

Signed by: Neil Rohrbaugh F10E19B55FF14DD...

DRAWN BY : NCR	DATE : 06-26	DESIGN ENGINEER OF RECORD: N. ROHRBAUGH	DATE : 07-26	DOCUMENT NOT CONSIDERED FINAL UNLESS ALL SIGNATURES COMPLETED
CHECKED BY : NKB	DATE : 06-26			

STV Engineers, Inc.
2151 Hawkins St., Suite 1400
Charlotte, NC 28203
NC License Number F-0991

REVISIONS						SHEET NO.
NO.	BY:	DATE:	NO.	BY:	DATE:	S-11
1			3			TOTAL SHEETS
2			4			16

DATE: 10/8/2026 TIME: 3:29:47 PM
FILE: $FILEL$

Docusign Envelope ID: A4C85892-DFF7-88C3-8168-668253DB637A

NOTE

SEE SHEET 3 OF 4 FOR MORE INFORMATION ON WINGS

SEE SHEET 3 OF 4 FOR MORE INFORMATION ON SPILL-THROUGH PLATES

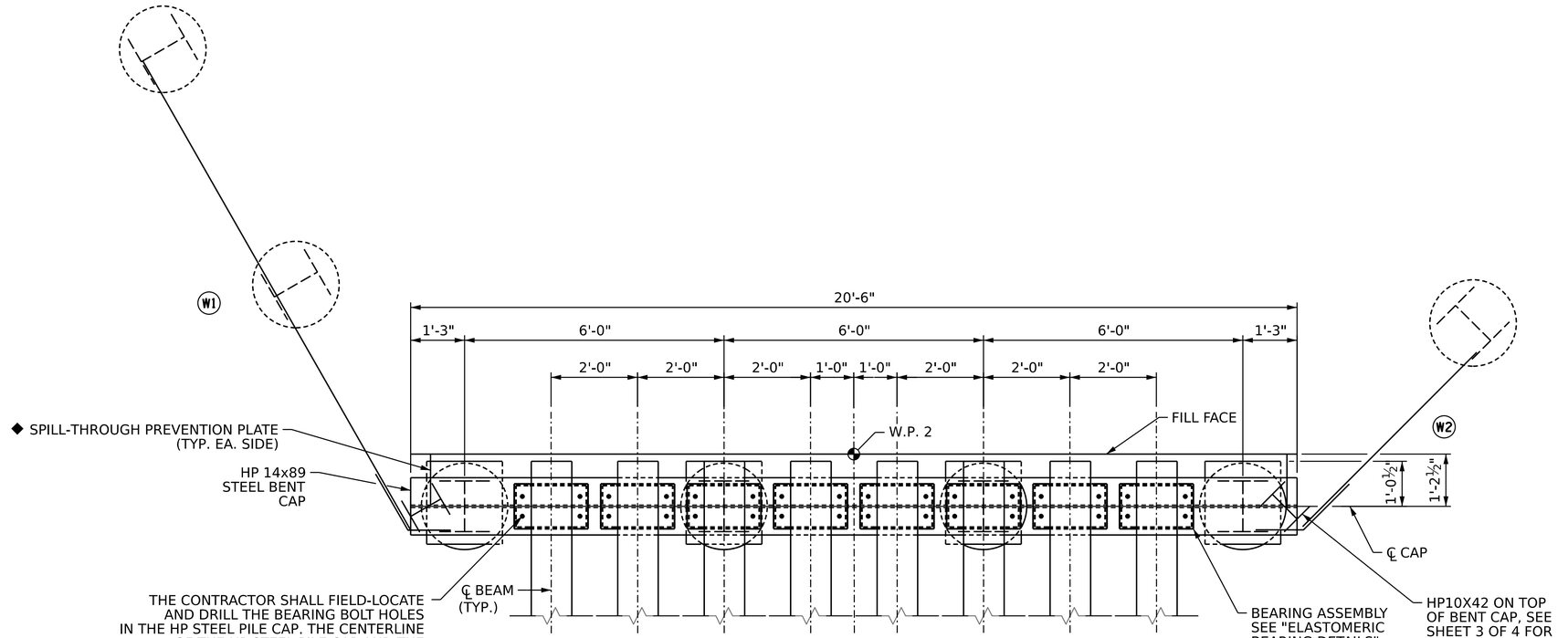

PLAN VIEW

(FOR CLARITY TIMBER DECK, NAILERS, AND STEEL BACKWALL NOT SHOWN.)

◆ PLATE CUT TO FIT BETWEEN BACKWALL AND HP10X42 PILE ON TOP OF CAP IN ORDER TO PREVENT FILL SPILL-THROUGH. APPROX. DIMENSIONS: 1'-3" WIDE X ½" THICK X HEIGHT FROM TOP OF CAP BEAM TO RESPECTIVE WING CUTOFF ELEVATION

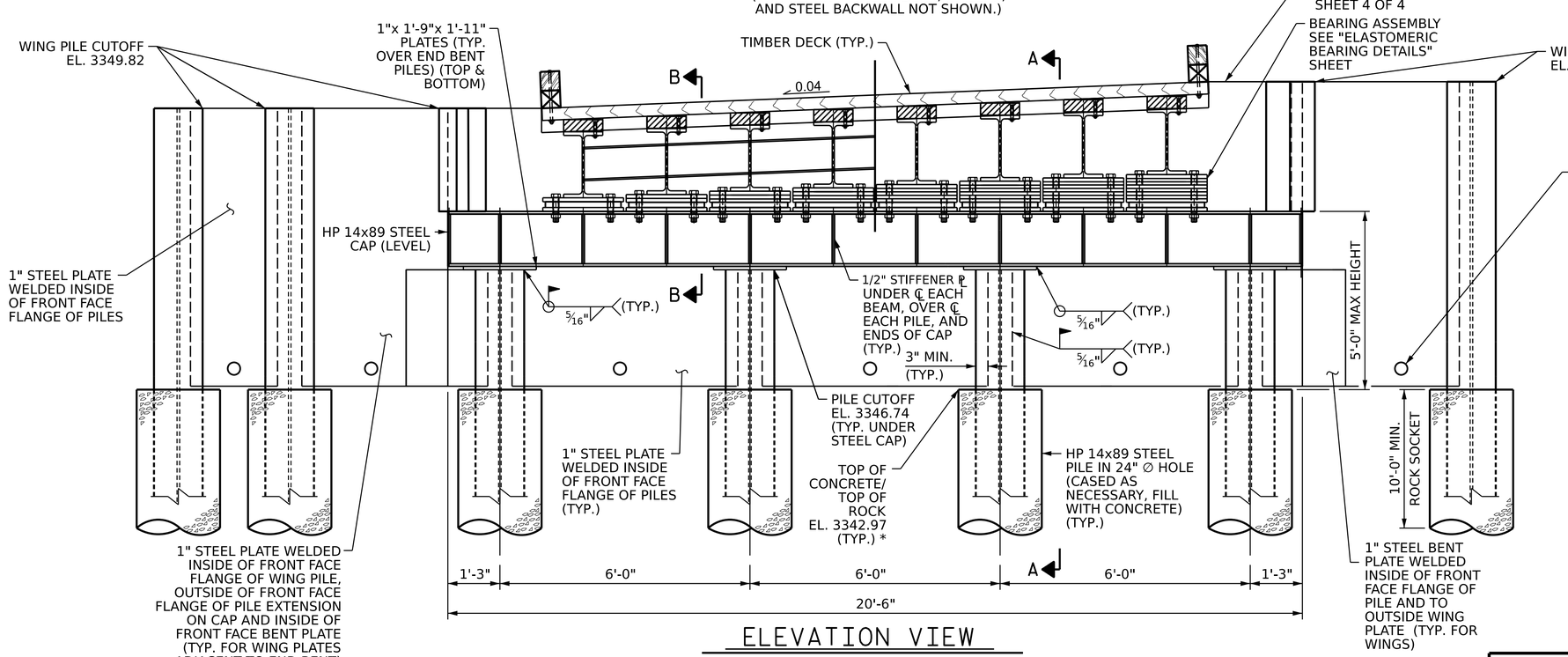

ELEVATION VIEW

* TOP OF CONCRETE/TOP OF ROCK ELEVATION SUBJECT TO CHANGE IF ROCK IS HIGHER THAN EXPECTED

PROJECT NO. 095-01-86E4F

WATAUGA COUNTY

STATION: 11+32.77 -L-

SHEET 2 OF 4

NORTH CAROLINA
DEPARTMENT OF TRANSPORTATION

END BENT 2 DETAILS

NORTH CAROLINA PROFESSIONAL SEAL 054243 ENGINEER NEIL C. ROHRBAUGH

10/15/2026

Signed by: Neil Rohrbaugh F10E19B55FF14DD...

DRAWN BY : NCR	DATE : 06-26	DESIGN ENGINEER OF RECORD: N. ROHRBAUGH	DATE : 07-26	DOCUMENT NOT CONSIDERED FINAL UNLESS ALL SIGNATURES COMPLETED
CHECKED BY : NKB	DATE : 06-26			

STV Engineers, Inc.
2151 Hawkins St., Suite 1400
Charlotte, NC 28203
NC License Number F-0991

REVISIONS						SHEET NO.
NO.	BY:	DATE:	NO.	BY:	DATE:	S-12
1			3			TOTAL SHEETS
2			4			16

DATE: 10/8/2026 TIME: 3:30:06 PM
FILE: $FILE$

Docusign Envelope ID: A4C85892-DFF7-88C3-8168-668253DB637A

◆ PLATE CUT TO FIT BETWEEN BACKWALL AND HP10X42 PILE ON TOP OF CAP IN ORDER TO PREVENT FILL SPILL-THROUGH. APPROX. DIMENSIONS: 1'-3" WIDE X ½" THICK X HEIGHT FROM TOP OF CAP BEAM TO RESPECTIVE WING CUTOFF ELEVATION

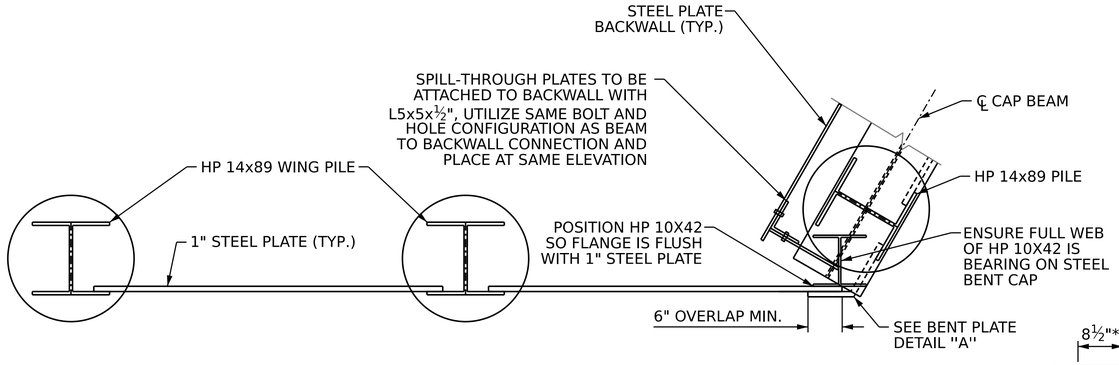

PLAN - WINGWALL W1

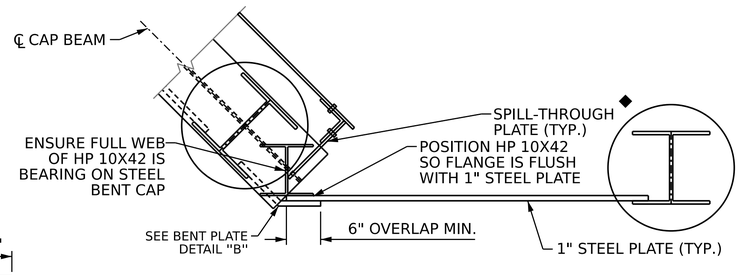

PLAN - WINGWALL W2

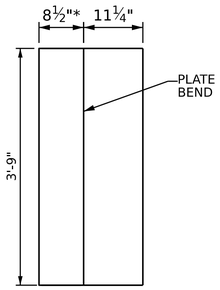

BENT PLATE "A"

* ENSURE CONTACT AREA WITH WING PLATE IS A MIN. OF 6" LONG

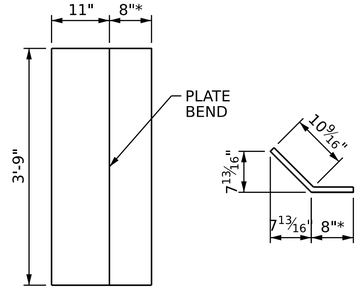

BENT PLATE "B"

* ENSURE CONTACT AREA WITH WING PLATE IS A MIN. OF 6" LONG

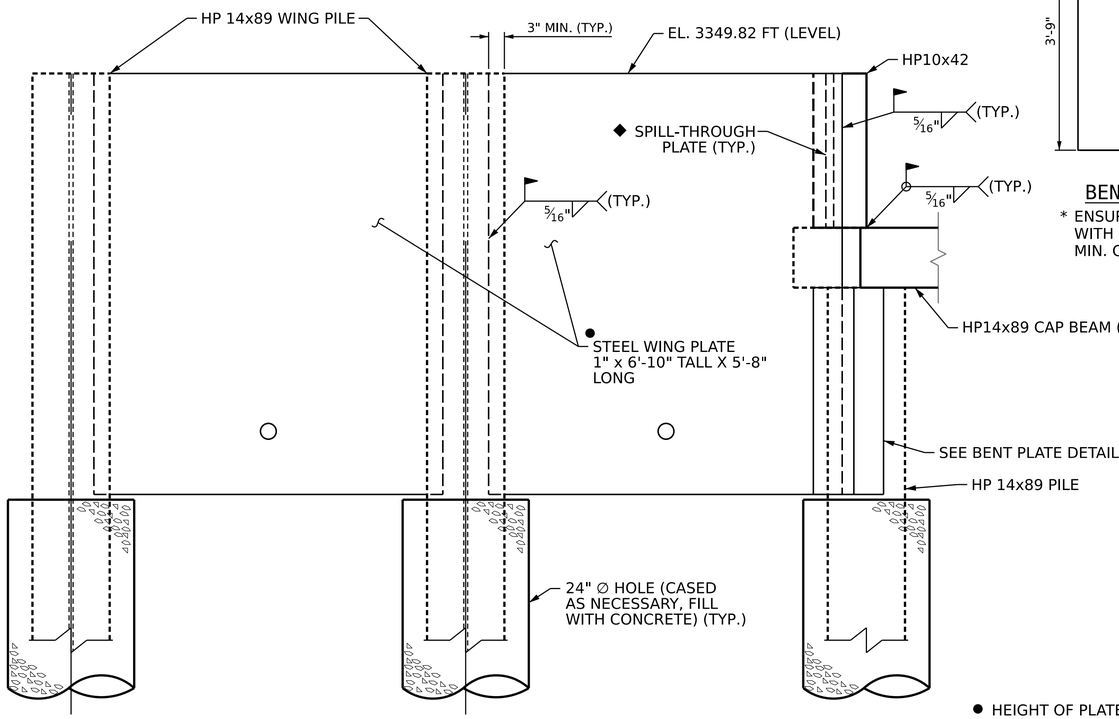

ELEVATION - WINGWALL W1

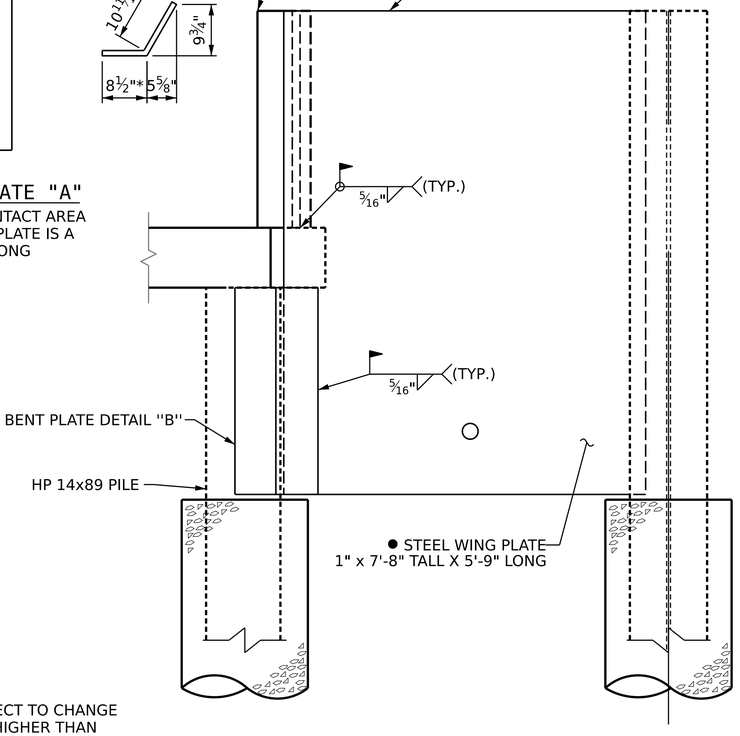

ELEVATION - WINGWALL W2

● HEIGHT OF PLATE SUBJECT TO CHANGE IF ROCK ELEVATION IS HIGHER THAN EXPECTED

NOTE

WING WALL QUANTITIES AND COST ARE INCLUDED HP 14X89 STEEL PILES, PILE EXCAVATION IN SOIL, PILE EXCAVATION NOT IN SOIL, AND STRUCTURAL STEEL QUANTITES.

PROJECT NO. 095-01-86E4F

WATAUGA COUNTY

STATION: 11+32.77 -L-

SHEET 3 OF 4

NORTH CAROLINA
DEPARTMENT OF TRANSPORTATION

END BENT 2 WING DETAILS

NORTH CAROLINA PROFESSIONAL SEAL 054243 ENGINEER NEIL C. ROHRBAUGH

10/15/2026

Signed by: Neil Rohrbaugh F10E18655FF14DD...

DRAWN BY : NCR	DATE : 06-26	DESIGN ENGINEER OF RECORD: N. ROHRBAUGH	DATE : 07-26	DOCUMENT NOT CONSIDERED FINAL UNLESS ALL SIGNATURES COMPLETED
CHECKED BY : NKB	DATE : 06-26			

STV Engineers, Inc.
2151 Hawkins St., Suite 1400
Charlotte, NC 28203
NC License Number F-0991

REVISIONS						SHEET NO.
NO.	BY:	DATE:	NO.	BY:	DATE:	S-13
1			3			TOTAL SHEETS
2			4			16

DATE: 10/8/2026 TIME: 3:35:58 PM
FILE: $FILEL$

Docusign Envelope ID: A4C85892-DFF7-88C3-8168-668253DB637A

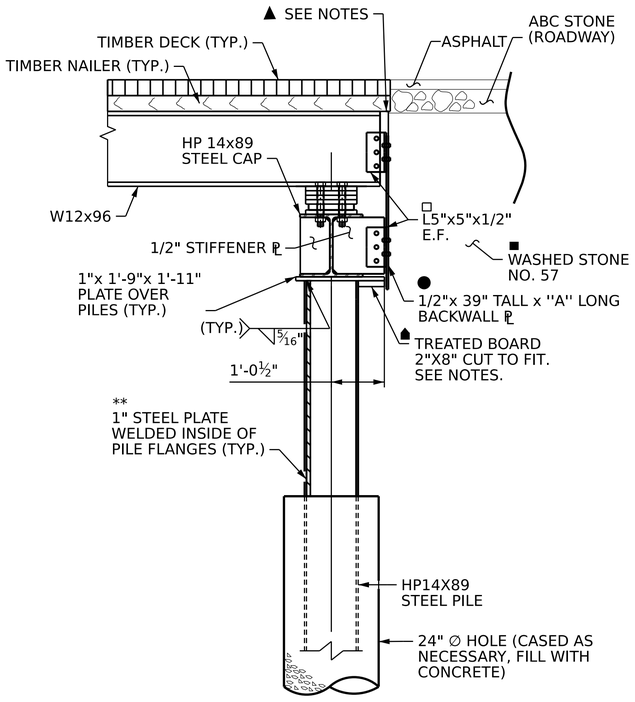

SECTION A-A

(END BENT 2 SHOWN. END BENT 1 SIMILAR, BUT NO ASPHALT APPROACH.)

BACKWALL PLATE LENGTH		
	END BENT 1	END BENT 2
''A''	19'-9"	20'-6"

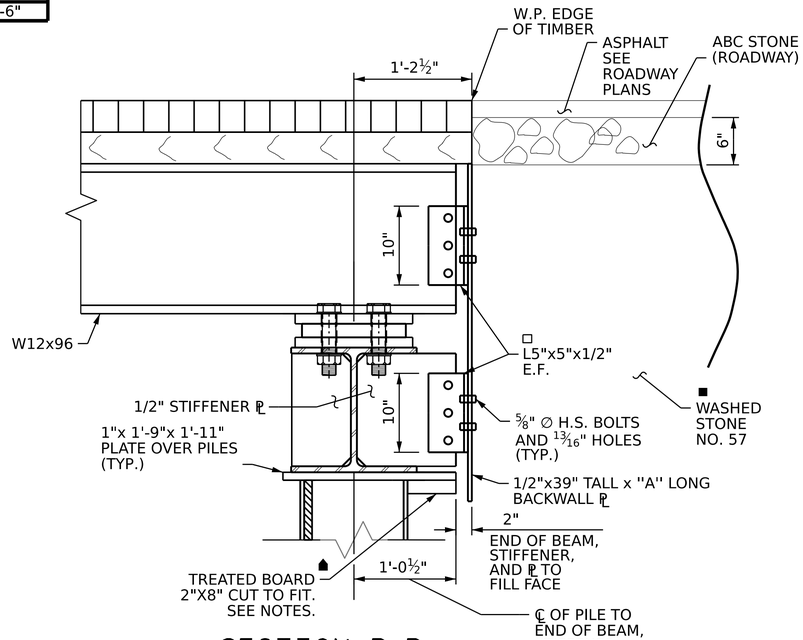

SECTION B-B

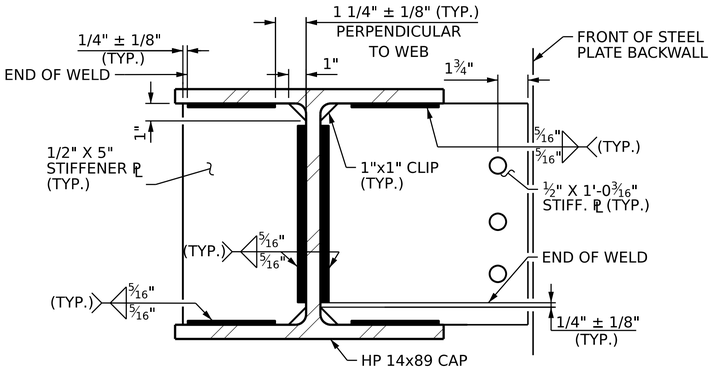

STIFF. DETAILS

STIFFENERS SHALL BE PLACED UNDER ℄ OF EACH BEAM, OVER ℄ OF EACH PILE, AND AT ENDS OF CAP BEAMS.

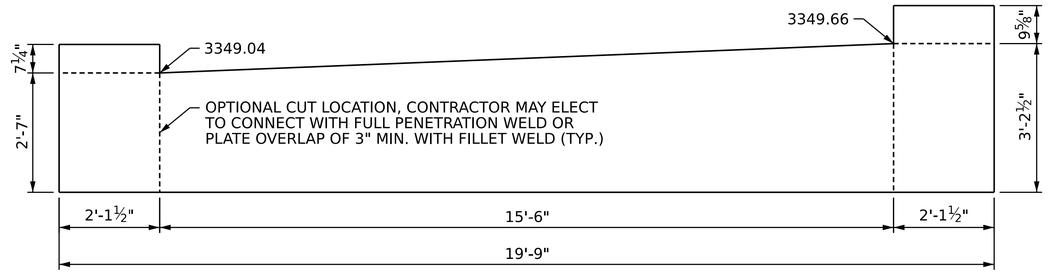

END BENT 1 BACKWALL PLATE

(LOOKING FORWARD ALONG SURVEY)

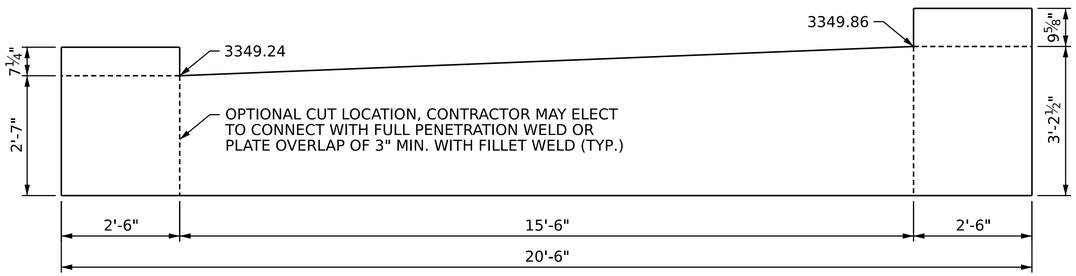

END BENT 2 BACKWALL PLATE

(LOOKING FORWARD ALONG SURVEY)

NOTES

■ WASHED STONE NO. 57 OF APPROVED ALTERNATE SHALL BE USED FOR APPROACH FILL FROM EXISTING GROUNDLINE TO BASE OF ABC LAYER. SEE ROADWAY STANDARD DRAWING 423.01 FOR GEOTEXTILE WRAP DETAILS AT TOP AND ALL SIDES OF APPROACH FILL.

▲ FIELD LOCATE TOP OF BACKWALL PLATE TO MATCH SUPERELEVATION OF DECK. 1/2" MAX GAP BETWEEN BOTTOM OF EDGE NAILER AND TOP OF BACKWALL PLATE. IT IS SUGGESTED TO FIELD DRILL THE BACKWALL IF THE FIELD WELDING IS NOT DESIRED.

● CONTRACTOR HAS THE OPTION TO FIELD WELD THE BACKWALL PLATE TO THE CONNECTION ANGLES RATHER THAN BOLTING. IT IS SUGGESTED TO FIELD DRILL THE BACKWALL HOLES IF A BOLTED CONNECTION IS USED.

☗ THE BOARD ON THE FILL FACE SIDE OF THE CAP IS TO BE FIELD INSTALLED FOR COMPACTION PURPOSES OF THE APPROACH FILL ALONG THE FULL LENGTH OF THE CAP. IT MAY BE TEMPORARILY FASTENED TO SUBSTRUCTURE AS COMPACTION IS TAKING PLACE.

ALL END BENT STEEL AND HARDWARE, INCLUDING THE PILES, PLATES, CAP, AND CONNECTIONS SHALL BE HOT DIPPED GALVANIZED IN ACCORDANCE WITH NCDOT STANDARD SPECIFICATIONS.

CONTRACTOR WILL NEED TO TEMPORARILY SUPPORT THE BACKWALL PLATE DURING ERECTION. THIS CAN BE COMPLETED BY BOLTING A SCRAP ROLLED BEAM TO THE FILL FACE SIDE OF THE PLATE ALONG THE FULL LENGTH OF THE PLATE.

ANY GALVANIZATION DAMAGED DURING CONSTRUCTION SHALL BE REPAIRED IN ACCORDANCE WITH NCDOT STANDARD SPECIFICATIONS ARTICLE 1076.

FOR ADDITIONAL NOTES, SEE "GENERAL NOTES SHEET".

□ BACKWALL PLATE SHALL BE CONNECTED TO STIFFENER AT EACH PILE, EXTERIOR BEAMS, AND AT LEAST ONE BEAM WEB ON EITHER SIDE OF THE CENTER OF THE BRIDGE

NORTH CAROLINA PROFESSIONAL SEAL 054243 ENGINEER NEIL C. ROHRBAUGH
10/15/2026
Signed by: Neil Rohrbaugh F10E19B55FF14DD...

PROJECT NO. 095-01-86E4F

WATAUGA COUNTY

STATION: 11+32.77 -L-

SHEET 4 OF 4

NORTH CAROLINA
DEPARTMENT OF TRANSPORTATION

END BENT DETAILS

DRAWN BY : NCR	DATE : 06-26	DESIGN ENGINEER OF RECORD: N. ROHRBAUGH	DATE : 07-26	DOCUMENT NOT CONSIDERED FINAL UNLESS ALL SIGNATURES COMPLETED
CHECKED BY : NKB	DATE : 06-26			

STV Engineers, Inc.
2151 Hawkins St., Suite 1400
Charlotte, NC 28203
NC License Number F-0991

REVISIONS						SHEET NO.
NO.	BY:	DATE:	NO.	BY:	DATE:	S-14
1			3			TOTAL SHEETS
2			4			16

DATE: 10/8/2026 TIME: 3:30:43 PM
FILE: $FILEL$

Docusign Envelope ID: A4C85892-DFF7-88C3-8168-668253DB637A

ESTIMATED QUANTITIES		
BRIDGE @ STA. 11+32.77 -L-	RIP RAP CLASS II (2'-0" THICK)	GEOTEXTILE FOR DRAINAGE
	TONS	SQUARE YARDS
END BENT 2	34	38

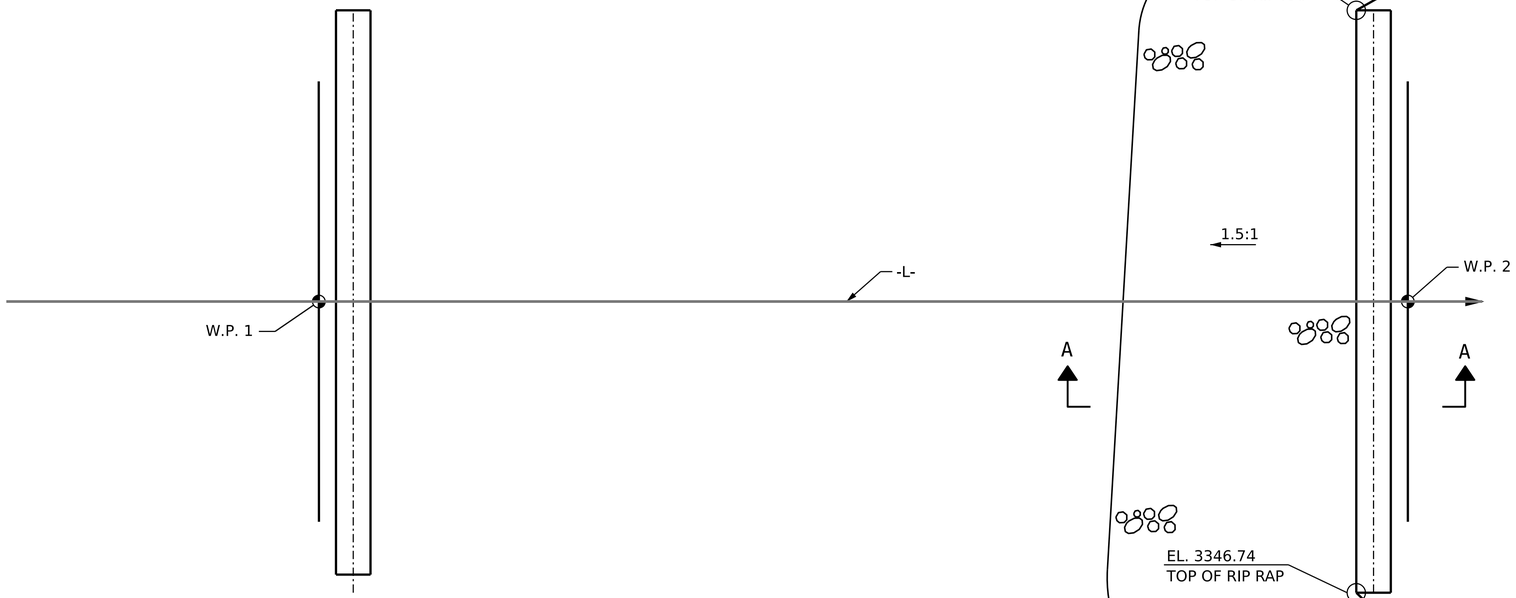

END BENT 1

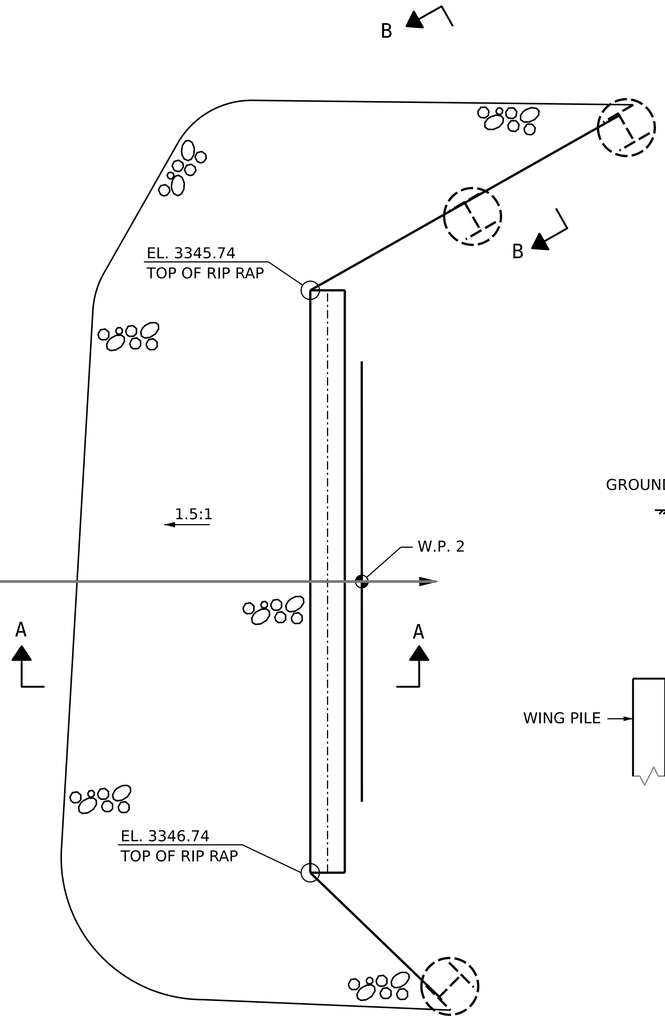

END BENT 2

PLAN

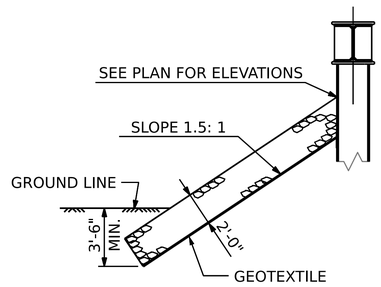

SECTION A-A

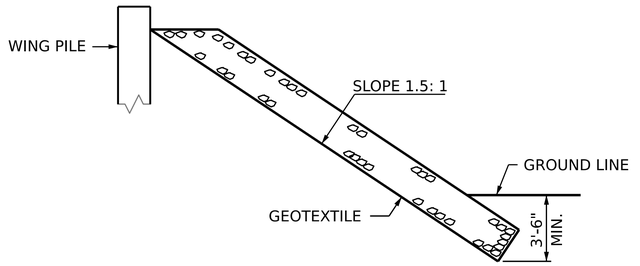

SECTION B-B

PROJECT NO. 095-01-86E4F

WATAUGA COUNTY

STATION: 11+32.77 -L-

NORTH CAROLINA PROFESSIONAL SEAL 054243 ENGINEER NEIL C. ROHRBAUGH

10/15/2026

Signed by: Neil Rohrbaugh F10E19B55FF14DD...

NORTH CAROLINA
DEPARTMENT OF TRANSPORTATION

RIP RAP DETAILS

DRAWN BY : NCR DATE : 06-26	DESIGN ENGINEER OF RECORD: N. ROHRBAUGH DATE : 07-26	DOCUMENT NOT CONSIDERED FINAL UNLESS ALL SIGNATURES COMPLETED
CHECKED BY : NKB DATE : 06-26		

STV Engineers, Inc.
2151 Hawkins St., Suite 1400
Charlotte, NC 28203
NC License Number F-0991

REVISIONS						SHEET NO.
NO.	BY:	DATE:	NO.	BY:	DATE:	S-15
1			3			TOTAL SHEETS
2			4			16

DATE: 10/8/2026 TIME: 3:39:52 PM
FILE: $FILEL$

Docusign Envelope ID: A4C85892-DFF7-88C3-8168-668253DB637A

GENERAL NOTES

DESIGN DATA:

SPECIFICATIONS	AASHTO (CURRENT)
LIVE LOAD	SEE PLANS
IMPACT ALLOWANCE	SEE AASHTO
STRESS IN EXTREME FIBER OF STRUCTURAL STEEL - AASHTO M270 GRADE 36	20,000 LBS. PER SQ. IN.
- AASHTO M270 GRADE 50	27,000 LBS. PER SQ. IN.
STRUCTURAL TIMBER - TREATED EXTREME FIBER STRESS	1,800 LBS. PER SQ. IN.
COMPRESSION PERPENDICULAR TO GRAIN OF TIMBER	375 LBS. PER SQ. IN.
EQUIVALENT FLUID PRESSURE OF EARTH	30 LBS. PER CU. FT. (MINIMUM)

MATERIAL AND WORKMANSHIP:

EXCEPT AS MAY OTHERWISE BE SPECIFIED ON PLANS OR IN THE SPECIAL PROVISIONS, ALL MATERIAL AND WORKMANSHIP SHALL BE IN ACCORDANCE WITH THE 2024 "STANDARD SPECIFICATIONS FOR ROADS AND STRUCTURES" OF THE N. C. DEPARTMENT OF TRANSPORTATION.

CONCRETE:

CLASS A CONCRETE SHALL BE USED FOR ALL PORTIONS OF ALL STRUCTURES.

STRUCTURAL STEEL:

WITH THE SOLE EXCEPTION OF EDGES AT SURFACES WHICH BEAR ON OTHER SURFACES, ALL SHARP EDGES AND ENDS OF SHAPES AND PLATES SHALL BE SLIGHTLY ROUNDED BY SUITABLE MEANS TO A RADIUS OF APPROXIMATELY $\frac{1}{16}$" OR EQUIVALENT FLAT SURFACE AT A SUITABLE ANGLE PRIOR TO PAINTING, GALVANIZING, OR METALLIZING.

SALVAGED BEAMS SHALL NOT BE USED.

ALL STRUCTURAL STEEL SHALL BE AASHTO M270 GRADE 50 AND PAINTED WITH SYSTEM 1 OR HOT DIPPED GALVANIZED IN ACCORDANCE WITH THE STRUCTURAL STEEL COATINGS PROGRAM AND SECTION 442-8 OF THE STANDARD SPECIFICATIONS, UNLESS OTHERWISE NOTED ON THE PLANS.

ALL STRUCTURAL STEEL FIELD CONNECTIONS SHALL USE 7/8" DIA. GALVANIZED HIGH STRENGTH BOLTS UNLESS OTHERWISE NOTED.

ALL STRUCTURAL STEEL HARDWARE SHALL BE GALVANIZED IN ACCORDANCE WITH SECTION 1076 OF THE STANDARD SPECIFICATIONS, UNLESS OTHERWISE NOTED ON THE PLANS.

A CHARPY V-NOTCH TEST IS REQUIRED ON ALL BEAM SECTIONS, AS SHOWN ON THE PLANS AND IN ACCORDANCE WITH ARTICLE 1072-7 OF THE STANDARD SPECIFICATIONS.

NO SHOP CAMBER REQUIRED, TURN NATURAL MILL CAMBER UP.

ALL STRUCTURAL STEEL FOR THE END BENT CAPS AND PILES SHALL BE HOT DIPPED GALVANIZED IN ACCORDANCE WITH THE STANDARD SPECIFICATIONS.

SPECIAL NOTES:

GENERALLY, IN CASE OF DISCREPANCY, THIS STANDARD SHEET OF NOTES SHALL GOVERN OVER THE SPECIFICATIONS, BUT THE REMAINDER OF THE PLANS SHALL GOVERN OVER NOTES HEREON, AND SPECIAL PROVISIONS SHALL GOVERN OVER ALL. SEE SPECIFICATIONS ARTICLE 105-4.

PROJECT NO. 095-01-86E4F

WATAUGA COUNTY

STATION: 11+32.77 -L-

NORTH CAROLINA
DEPARTMENT OF TRANSPORTATION

GENERAL NOTES

NORTH CAROLINA PROFESSIONAL ENGINEER SEAL 054243 NEIL C. ROHRBAUGH

10/15/2026

Signed by: Neil Rohrbaugh

F10E19B55FF14DD...

DRAWN BY : FMW DATE : 05-26

CHECKED BY : MDN DATE : 05-26

DESIGN ENGINEER OF RECORD: N. ROHRBAUGH DATE : 07-26

DOCUMENT NOT CONSIDERED FINAL UNLESS ALL SIGNATURES COMPLETED

STV Engineers, Inc.
2151 Hawkins St., Suite 1400
Charlotte, NC 28203
NC License Number F-0991

REVISIONS						SHEET NO.
NO.	BY:	DATE:	NO.	BY:	DATE:	S-16
1			3			TOTAL SHEETS
2			4			16

DATE: 10/8/2026 TIME: 3:32:58 PM
FILE: $FILE1$